SPIROTECH

Maximising Performance for You

INSTRUCTION MANUAL

MULTICONTROL COOL (EMCC)



SPIROEXPAND®

Copyright ©
All rights reserved. No part of this instruction manual may be reproduced and/or published on the Internet, by means of printing, photocopying, microfilm or in any other way without the prior written permission of Spirotech bv.

TABLE OF CONTENTS

1. PREFACE 5

1.1. About the device 5
1.2. About this document 5
1.3. symbols 5

2. SAFETY 6

2.1. Safety instructions 6

3. GENERAL 9

3.1. Description of the device 9
3.2. CE mark 10
3.3. Type plate 10

4. ASSEMBLY 11

4.1. Setting up the device 11
4.2. MULTICONTROL EMCC-N1 make-up module 12
4.3. Connection to the water supply system 12
4.4. Connection side right / left 12
4.5. Use of MULTICONTROL devices without degassing function 14
4.6. Use of intermediate vessels 15
4.7. Temperature sensor T2 15
4.8. Electrical connection 16

5. HYDRAULIC CONNECTION DIAGRAMS 18

5.1. MULTICONTROL COOL EMCC with degassing function (standard diagram) 18
5.2. MULTICONTROL COOL EMCC without degassing function 19
5.3. MULTICONTROL COOL EMCC with degassing function and intermediate vessel 20

6. CIRCUIT DIAGRAMS 21

6.1. MULTICONTROL COOL EMCC 21
6.2. MULTICONTROL COOL EMCC 22
6.3. MULTICONTROL COOL EMCC 23
6.4. Legend - MULTICONTROL COOL EMCC 24

7. COMMISSIONING 25

7.1. Putting the device into operation 25

8. THERMAL INSULATION 30

9. ACCESSORIES 31

9.1. Drip tray 31

10. CLEANING AND MAINTENANCE 32

10.1. Cleaning 32
10.2. Maintenance 32

11. SPARE PARTS LIST 34

11.1. Cover and expansion vessel 34
11.2. Piping 35
11.3. Electronics 36
11.4. EMCC-N1 make-up module 38

12. CERTIFICATES 39

12.1. CE declarations of conformity 39

13. APPENDIX 40

13.1. Sizing the expansion line 40
13.2. Details of the connection of MULTICONTROL EMCC to EMCC-G/Z 41

Disclaimer of Liability
This instruction manual has been prepared with the greatest care possible. However, we are constantly striving to improve our products and we reserve the right to make changes at any time and without prior notice. We do not guarantee the accuracy and completeness of this document. Any claims, in particular claims for damages and loss of profit or financial loss, are excluded.

1. PREFACE

1.1. About the device

This instruction manual covers the installation, commissioning and operation of the following MULTICONTROL COOL types:

TYPE	DESCRIPTION	COMPOSITION
EMCC-S1-__	MULTICONTROL COOL SOLO	Single pump 100%, single valve 100%
EMCC-D1-__	MULTICONTROL COOL DUO	Double pump 2x50%, single valve 1x100%
EMCC-M1-__	MULTICONTROL COOL MAXI	Double pump 2x100%, single valve 1x100%

1.2. About this document

Read this instruction manual before installation, commissioning and operation. Keep the instructions for future reference.

The original language of the document is German. All other available language versions are translations of the original instructions.

The illustrations in this document show a typical structure with relevant details and may differ from the model supplied depending on the type and equipment, but do not affect the comprehensibility of this document.

1.3. symbols

The following symbols are used in this instruction manual:

SYMBOLS		
	CAUTION	This symbol warns of a dangerous situation in which failure to observe the hazard warning may result in minor, reversible injuries.
	**WARNING**	This symbol warns of an extremely dangerous situation in which failure to observe the hazard warning may result in death or serious irreversible injury.
	**ELECTRICAL HAZARD**	This symbol warns of the risk of electric shock.
	**NOTE**	This symbol warns of situations in which failure to observe the instructions can lead to material damage.

2. SAFETY

2.1. Safety instructions

This safety information warns the user of risks and shows how the risks can be avoided.

Due to the design of the pressurisation unit, hardly any hazards are to be expected.

However, it should always be noted that hot system media (e.g. heating water) or even harmful media can leak out when handling these devices!

Since different devices each may have a special medium contained within, EDER Spirotech cannot predict which medium the respective system will use. This also applies to harmful mixtures of media that may be used in the system.

It is the responsibility of the person setting up the system and, after proper handover, the responsibility of the operator of the system to take appropriate safety precautions if necessary and to affix warning notices to the device!

WARNING
The following areas of application are expressly excluded:
- Use in potentially explosive atmospheres
- Use outdoors
- Use in rooms with risk of water jets
- Use in areas with heavily polluted ambient air

If it is the case that the system medium is a hazardous, harmful substance, the following hazardous situations may arise:

- For maintenance purposes, a filling and drain cock is installed in the pressurisation unit, which allows the hot and harmful system medium to escape by opening the cock.

WARNING
In this case there is a risk of scalding!

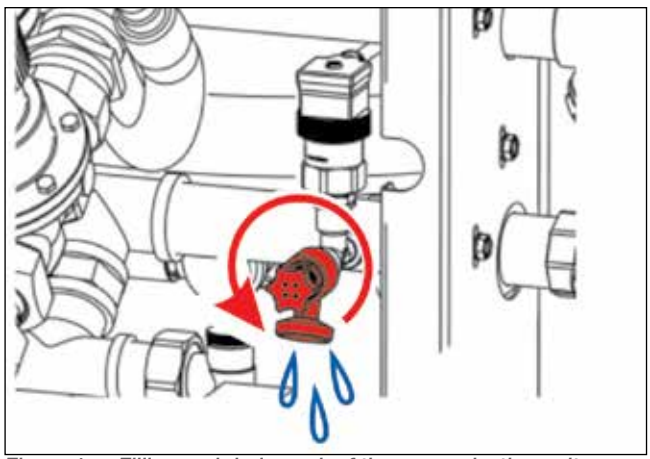

Figure 1: Filling and drain cock of the pressurisation unit

Another filling and drain cock is located on the lower flange of the vessel. This is also used for maintenance purposes, whereby harmful and hot system media can escape when the tap is opened.

WARNING
In this case there is a risk of scalding!

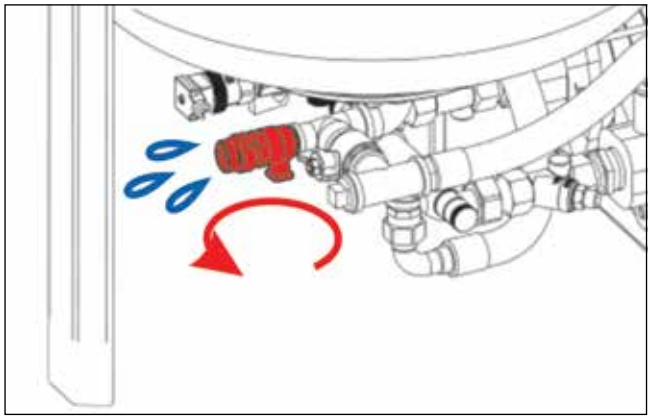

Figure 2: Filling and drain cock of the vessel

There is a 0.5 bar safety valve on the top flange of the vessel, which can be triggered by the following causes and thus allow hot and harmful system media to escape:

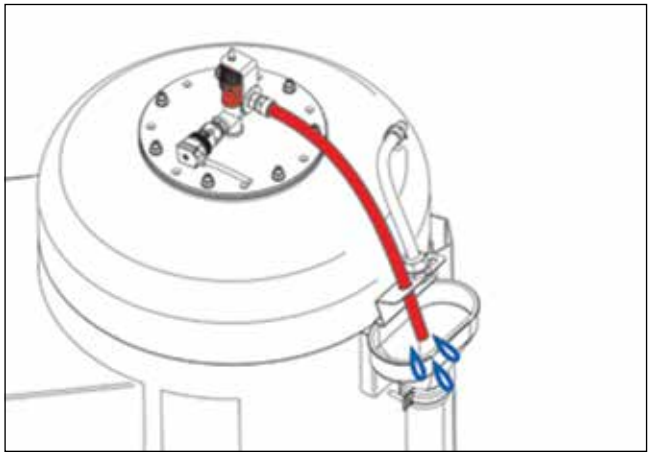

Figure 3: Safety valve of the vessel

- The automatic expansion unit or the expansion vessel have been sized incorrectly (too small) and the entire expansion volume cannot be accommodated in the vessel.
- The content measurement may not work correctly due to defective pressure transmitters or a defective membrane, which can cause the vessel to overflow.
- The vessel was filled to too high a level in the cold state (possibly by the “Fill once” function, or in an uncontrolled manner when no MCF make-up module is fitted), without allowing for the expansion volume that occurs, which can therefore no longer be fully accommodated in the vessel.

WARNING
In this case there is a risk of scalding!

There is a drain cock at the bottom of the vessel, which is not expected to pose any danger during normal operation. If the membrane installed in the vessel is defective for any reason, hot and harmful system media can leak out through this cock.

WARNING
In this case there is a risk of scalding!

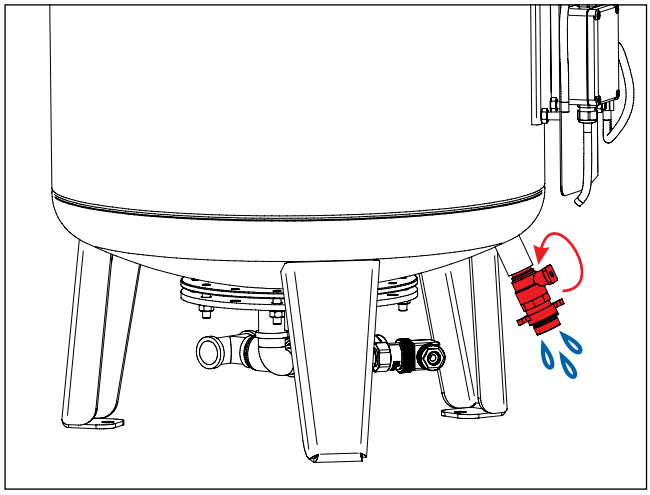

Figure 4: Drain cock of the vessel

WARNING
- Installation, commissioning and servicing may only be carried out by suitably qualified personnel.
- If the device is damaged, it must be taken out of operation and repaired by trained specialists.
- The device must be de-energised before carrying out any electrical work!
- No changes may be made to the product.
- Operation is only permitted with the housing closed.

NOTE
Illustrations in this document may differ from the model supplied depending on the type and equipment.

CAUTION
EDER devices are subjected to a functional test at the factory before delivery and the device is filled with a frost-protected ready-mixed test water. Although the device is emptied as far as possible after the function test, small quantities of testing water (max. approx. 1.5 litres) may remain in the device, depending on the device type and design.

This test water is frost-protected down to -20°C and is produced on the basis of propylene glycol together with protective substances. Experience has shown that such small quantities of test water in the system do not cause any problems at the final destination when mixed with the system water there.

However, if there are concerns about the introduction of such a small amount of test water into the system at the destination, the pressurisation unit must also be flushed before connecting it to the system in the same way as is specified for the system itself (e.g. in ÖNORM H5195-1)

3. GENERAL

3.1. Description of the device

MULTICONTROL COOL EMCC for loss-free absorption of the expansion volume and for pressure stabilisation in closed heating, air-conditioning and cooling systems. Owing to its construction and the use of corrosion-resistant materials in the areas of the unit where condensation is to be expected, it is particularly suitable for use in cooling systems.

Attractively styled, self-contained unit of self-supporting, sound-insulating construction for modular combination with unpressurised expansion vessels EMCC-G and EMCC-Z (max. 0.5 bar), connections for the suction and overflow line at the rear together with the necessary shut-offs.

Control unit as compact hydraulics with one or two low-noise pressurisation pumps (SOLO model 1x100%, DUO model 2x50%, MAXI model 2x100%), designed as a multistage centrifugal pump with a top-quality mechanical shaft seal, and a mechanically set overflow valve with continuous pressure-proportional control (1x100% of the expansion volumetric flow).

Precision system pressure measurement. Hydraulic connections for on-site integration ex works on the right and with necessary shut-off valves (can be easily converted to the left). Thermal separation between the compact hydraulics and the control top section. Temperature monitoring of the system medium entering the vessel. Prepared connection point for easy installation of the make-up module for volume-controlled, litre-accurate make-up, also designed for retrofitting at any time.

Electronic control unit in microprocessor design for controlling all processes, ergonomically arranged control panel with sophisticated operating concept in many national languages. Self-contained compact measuring and switching unit in closed control cabinet design including connection cables. Four volt-free signal contacts as standard (fault, warning, make-up running, device function enabled), plus inputs for "ext. enable contact device function" and "external message".

For extended signal exchange, prepared installation slots for additional expansion modules (also for retrofitting). Remote monitoring of the device is also possible using various MULTICONTROL bus modules or MULTICONTROL web module (also prepared for retrofitting).

Automatic, economical low-pressure degassing function based on the principle of depressurisation integrated as standard. Additional external temperature monitoring provided by optional temperature sensor at the point of integration into the system.

- max. safety cut-out temperature of the system: 110 °C (with intermediate vessel)
- max. temperature at the connection point: 70°C
- min. temperature at the connection point: -10°C
- max. operating pressure (PN): 10 bar

MULTICONTROL COOL expansion vessel EMCC-G and EMCC-Z for accommodating the expansion volume. Unpressurised expansion vessel (max. 0.5 bar), designed as a painted stainless steel vessel (100% of the volume usable). High-quality, exchangeable vessel membrane flanged on both sides for optimum separation of system medium and atmosphere.

Safety valve 0.5 bar for vessel protection and factory-fitted drain funnel. Drain and blow-down valve on the lower vessel flange. Differential pressure level measurement (EMCC-G only) with a 6 m long electrical connecting cable to the MULTICONTROL COOL control unit. Owing to its construction and the use of corrosion-resistant materials in the areas of the unit where condensation is to be expected, it is particularly suitable for use in cooling systems.

- min./max. temperature at the connection point: -10 °C / 70 °C
- max. operating pressure: 0.5 bar

3.2. CE mark

The device is CE labelled. This means that the device has been developed, built and tested in accordance with the applicable health and safety regulations. Provided that the instruction manual is followed, the device can be used and maintained safely.

3.3. Type plate

The rating plate of the device is located on the side of the device and is shown in the illustration below.

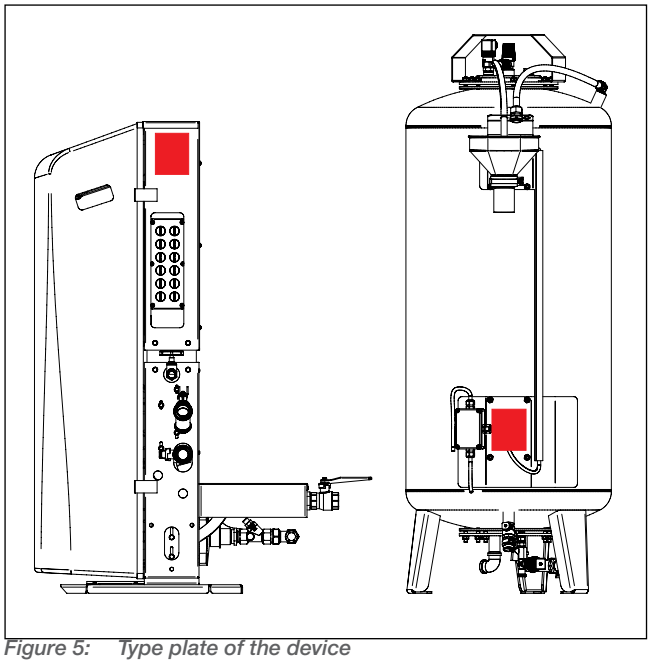

Figure 5: Type plate of the device

4. ASSEMBLY

4.1. Setting up the device

The device must be set up on a level, solid floor. Any unevenness must be levelled out. Setting the device up outdoors is not permitted. For devices with adjustable feet, it is also important to ensure that they are set up vertically.

Storage:
Ambient temperature min./max: -18°C/40°C
Storage area must be protected from precipitation and direct sunlight.

Operation:
The device should only be installed in enclosed indoor areas of buildings. The ambient temperature in the installation room must be between +5°C and +40°C from the time the device is first filled with the system medium until it is taken out of service.

Sufficiently bright electrical lighting must be provided for the display and safety equipment, the operating devices and the access routes. Objects that are not intended for the operation or maintenance of the pressurisation system must not be stored in the immediate vicinity of the system (observe construction and safety regulations).

Integration into the system return is carried out according to the diagrams (in Chapter 5 - "Hydraulic connection diagrams").

Our pressurisation units are suitable for systems in which the min. temperature at the connection point does not fall below -10 °C and the max. temperature at the connection point does not exceed 70 °C. If temperatures above 70 °C or below -10 °C can occur at the point of integration into the system, an intermediate vessel must be used (see Chapter 4.6 “Use of intermediate vessels”). The connection to the system return must be made at a point where there are no external hydraulic pressures that could influence the proper functioning of the pressurisation system.

The expansion line is sized in accordance with ÖNORM H5151-1. See Appendix 12.1.

NOTE
We recommend connecting the pressurisation unit at a size of at least DN 25.

NOTE
For details of the hydraulic connection of MULTICONTROL EMCC to EMCC-G or EMCC-Z expansion vessels, see the Appendix.

CAUTION
Danger of damage due to stray welding currents during installation with electric welding processes! If the welding current return cable is connected incorrectly to the part of the system to be welded, welding current may flow via the protective earth conductor. This can destroy protective conductors, damage devices and electrical equipment, overheat components and cause fires!

4.2. MULTICONTROL EMCC-N1 make-up module

MULTICONTROL COOL series units are supplied ex works without an EMCC-N1 make-up module. Retrofitting is possible at any time. This module is installed in accordance with the instructions supplied with the module.

4.3. Connection to the water supply system

MULTICONTROL COOL units with a built-in EMCC-N1 make-up module are equipped with a connection for the fresh water supply.

If the fresh water connection is connected to the public water supply system, non-drinking water (heating water) must be prevented from being siphoned back into the water supply system. Appropriate devices that reliably prevent back siphoning are not built into the MULTICONTROLdevice and must be provided externally (on site) (e.g. system separator).

FRESH WATER CONNECTION:	
Maximum inlet water pressure	1.0 MPa = 10 bar
Minimum inlet water pressure	0.2 MPa = 2 bar

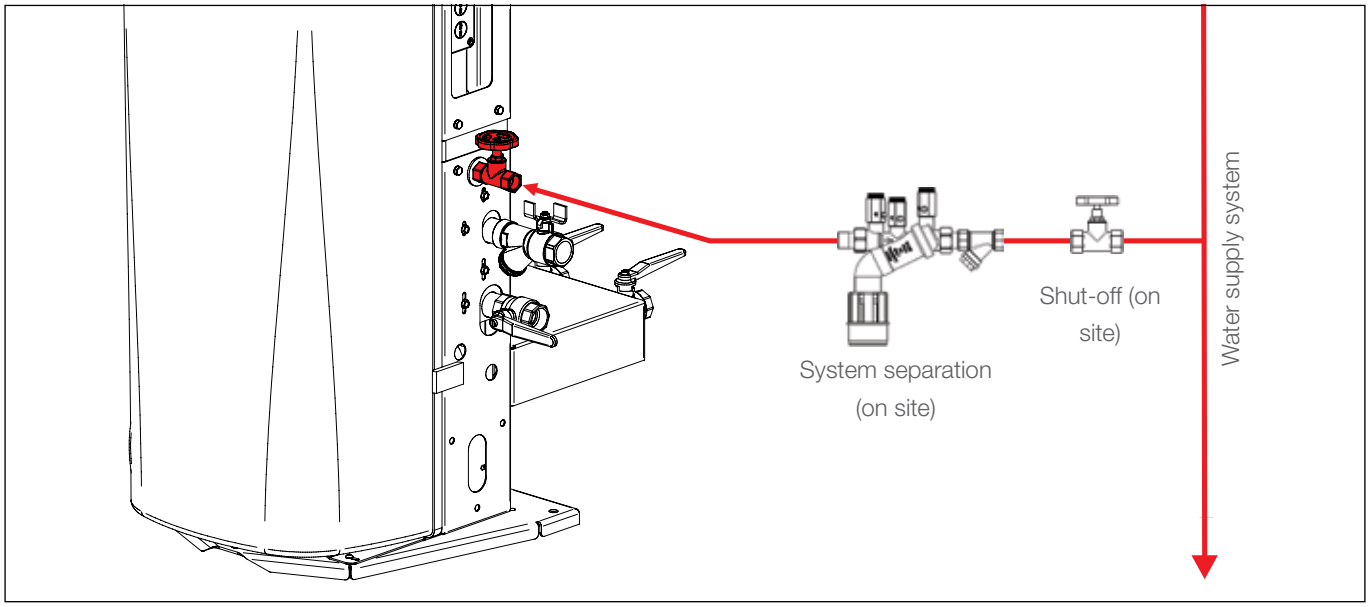

Figure 6: Connection for fresh water supply

CAUTION
Units intended for connection to the water supply system must be fitted on site with devices that reliably prevent non-potable water from being drawn back into the water supply system.

4.4. Connection side right / left

On MULTICONTROL COOL series units, the connections from/to the system return are located on the right-hand side ex works. These can be converted to the left-hand side if required. The other side must be closed with the caps supplied (Fig. 7).

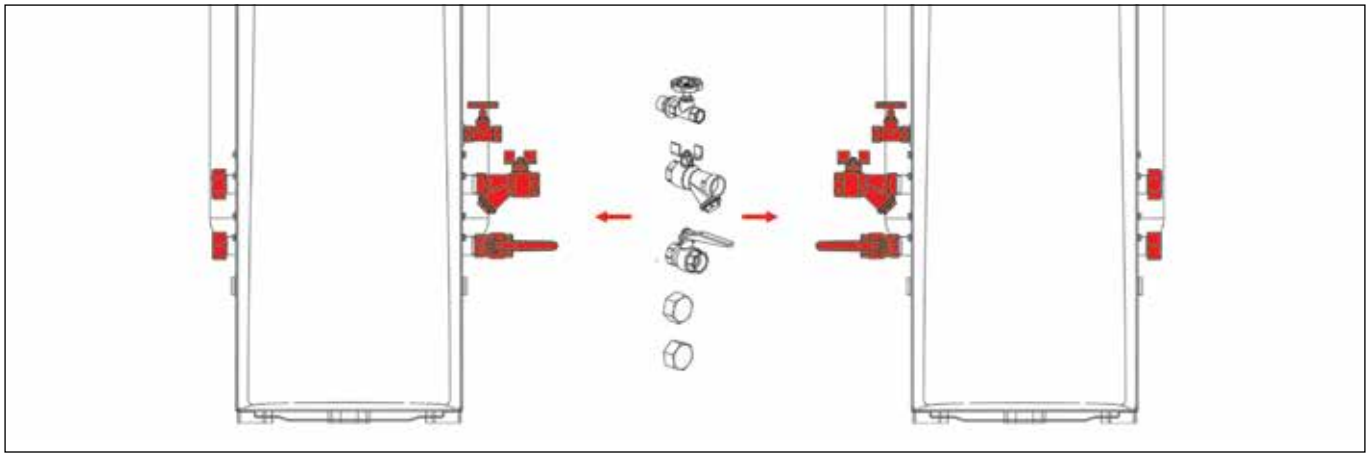

Figure 7: MULTICONTROL COOL: conversion of the hydraulic connection side

The connections from/to the expansion vessel are located on the rear of the device (Fig. 8).

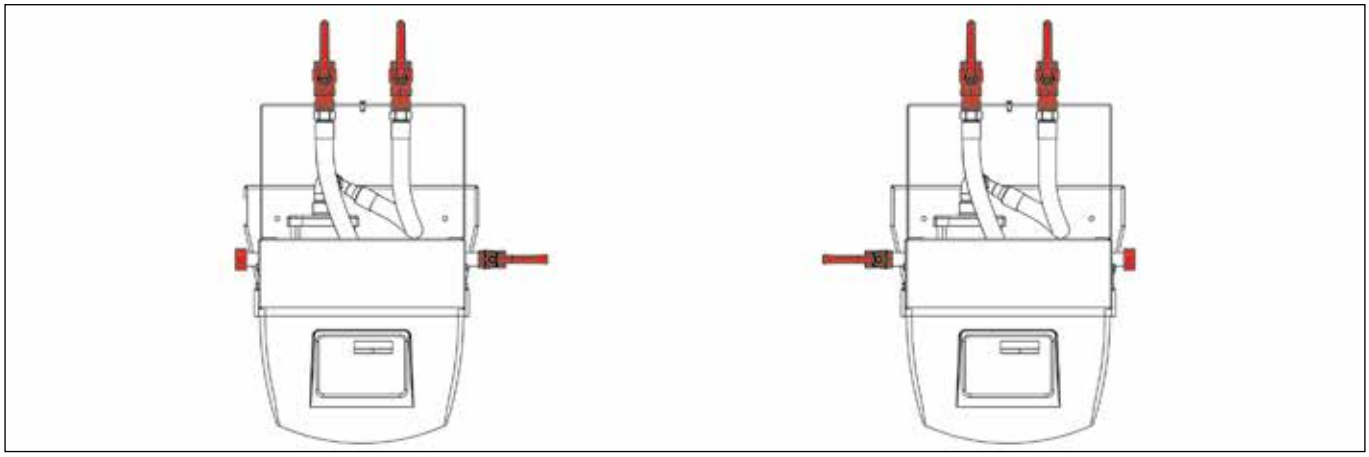

Figure 8: MULTICONTROL COOL: conversion of the hydraulic connection side

The electrical connections (cable flange plate with pre-punched cable glands) are also located on the right-hand side of the unit and can also be converted to the left-hand side if required (Fig. 9).

The opening on the other side must be closed with the blind flange (ex works on the left-hand side) (Fig. 10).

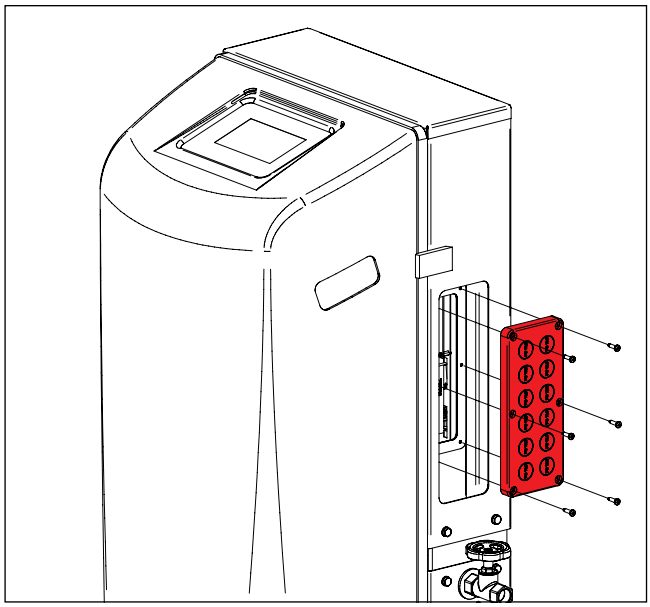

Figure 9: Cable flange plate

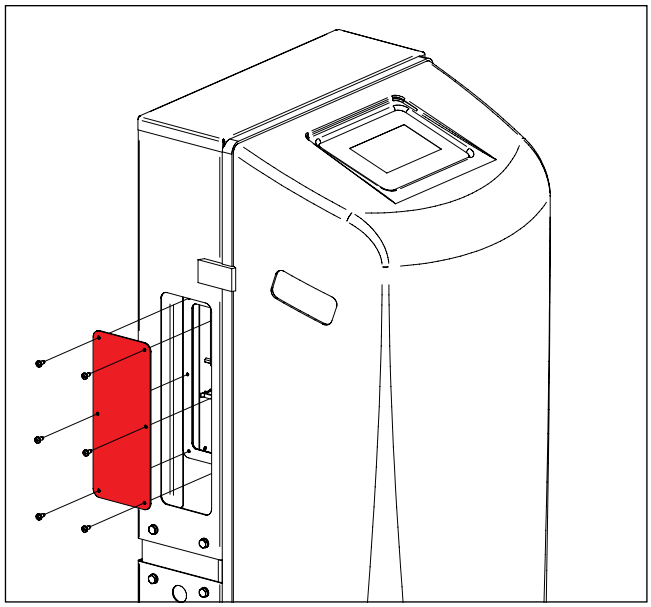

Figure 10: Blind flange

4.5. Use of MULTICONTROL devices without degassing function

MULTICONTROL COOL series units can also be operated without the degassing function. The unused connections must be connected to each other as shown in the diagram below (Fig. 11). This connection can be made using the MULTICONTROL bypass set available as an accessory. Alternatively, it can also be provided on site (DN 25).

Integration into the system is then carried out with a single line only (connection “EXPANSION OVERFLOW LINE from the system return”) into the system return. See also Chapter 5 - “Hydraulic connection diagrams”.

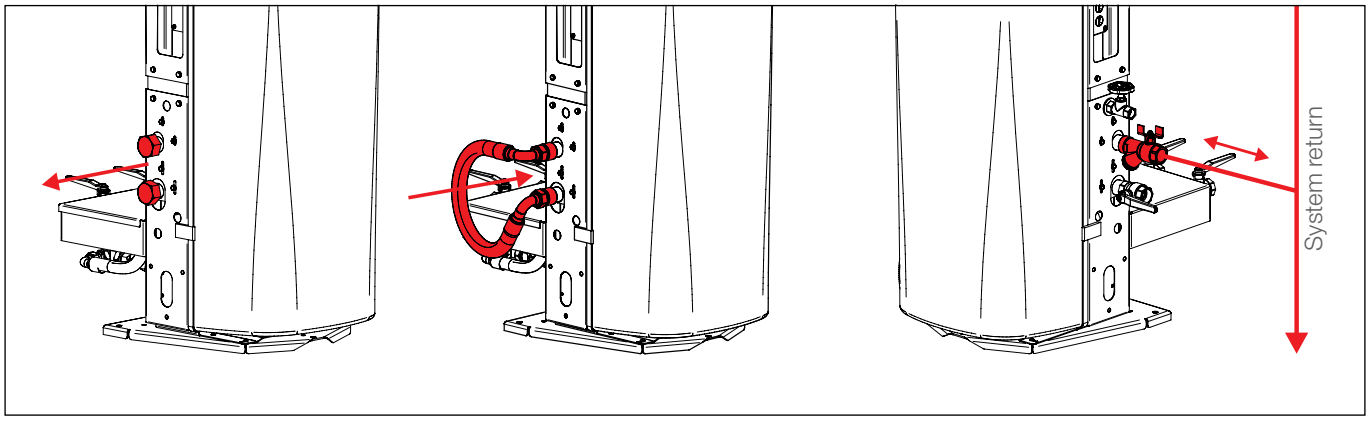

Figure 11: Connection of the connections to the bypass set and connection to the system return

CAUTION
If the MULTICONTROL is used without the automatic low-pressure degassing, the degassing function must be deactivated in the device set-up. Otherwise there will be unnecessary pump running time, but no fault!

4.6. Use of intermediate vessels

MULTICONTROL COOL series units are designed for temperatures from -10 to +70 °C.

If temperatures below -10 °C (down to -20 °C) can occur at the point of integration into the system, an intermediate vessel must be used.

A vent valve must be fitted at the upper connection of the intermediate vessel. This must be vented once during commissioning.

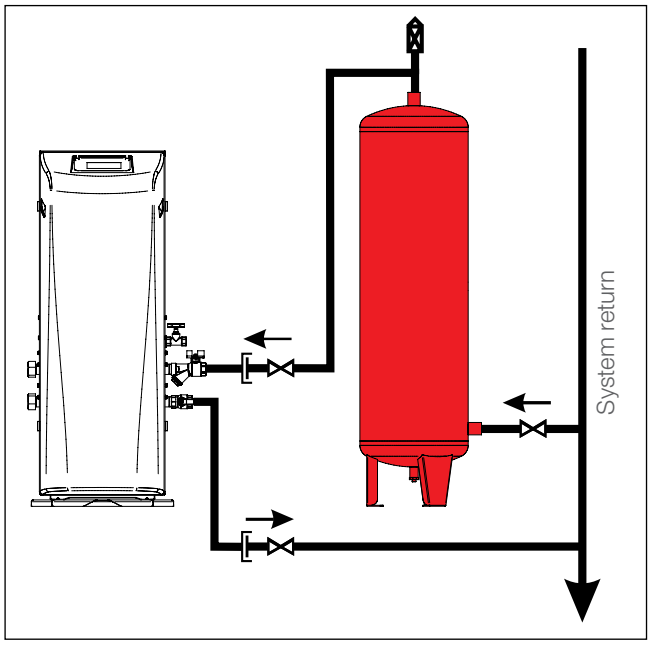

Figure 12: Use of an intermediate vessel

NOTE
When an intermediate vessel is used, ensure that it is on no account thermally insulated. This also applies to the entire expansion line from the system return to the automatic expansion unit.

4.7. Temperature sensor T2

In conjunction with the T2 temperature sensor available as an accessory, EMCC units offer the option of monitoring the temperature in the system return or in the expansion overflow line.
This monitoring blocks the degassing function whenever the temperature is momentarily too high or too low, in order to protect the unit and to prevent the fittings and the membrane from being damaged by system medium that is too hot or too cold during the degassing process. The installation of a T2 temperature sensor is strongly recommended in all cases for systems with a safety cut-out temperature above 95 °C, or for systems in which temperatures below -10 °C are to be expected in the system return.

This T2 temperature sensor is integrated on site in the system return immediately upstream of the connection point (Fig. 13). When an intermediate vessel is used, a socket is provided on the intermediate vessel for this purpose (Fig. 14).

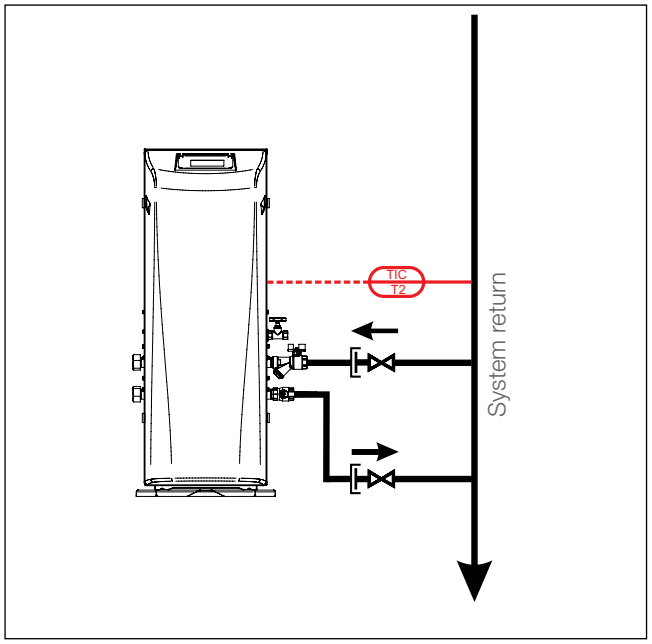

Figure 13: Integration of the T2 temperature sensor without an intermediate vessel

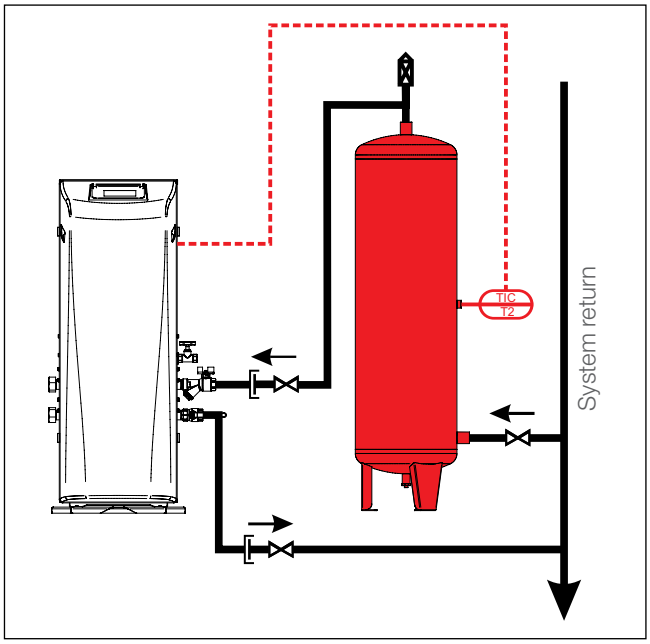

Figure 14: Integration of the T2 temperature sensor with an intermediate vessel

4.8. Electrical connection

For single-phase devices, the mains supply cable is designed as a protective contact supply cable and should be connected by plugging it into a protective contact socket. This plug is intended for complete disconnection of the device from the mains; no other disconnecting devices are included.

If a direct connection to the mains is required, an appropriate device must be installed on site to enable complete disconnection from the mains (e.g. two-pole main switch).

The device must be secured on site and connected to an external all-pole mains switch.

Ensure that the electrical data specified on the rating plate matches the existing power supply.

The device must be connected to the equipotential bonding before commissioning. A corresponding connection point is provided on the device and labelled accordingly.

Phase, neutral conductor
Both when connecting to the earthed socket and when connecting directly to the mains, ensure that the phase and neutral conductors are not interchanged. A corresponding check must be carried out by a suitably trained electrician as part of the electrical installation.

The phase and neutral conductors are connected correctly if, with the power supply connected, no voltage is measured between the earthing busbar and the neutral busbar (the earthing and neutral busbars are located in the control cabinet of the MULTICONTROL unit).
If a voltage equal to the supply voltage (approx. 230V~) is measured during this check, the phase and neutral conductors must be connected reversed and the polarity reversed accordingly.

Important! Any reversal of phase and neutral must always be carried out outside the MULTICONTROL unit (When connecting to an earthed socket, the phase and neutral conductors must be swapped in the socket).

CAUTION
If the mains connection cable of this device is damaged, it must be replaced by the manufacturer or its customer service or a similarly qualified person in order to avoid hazards.

WARNING
The applicable electrical regulations must be observed and complied with!

NOTE
The electrical connection values can be found on the type plate of the device.

5. HYDRAULIC CONNECTION DIAGRAMS

5.1. MULTICONTROL COOL EMCC with degassing function (standard diagram)

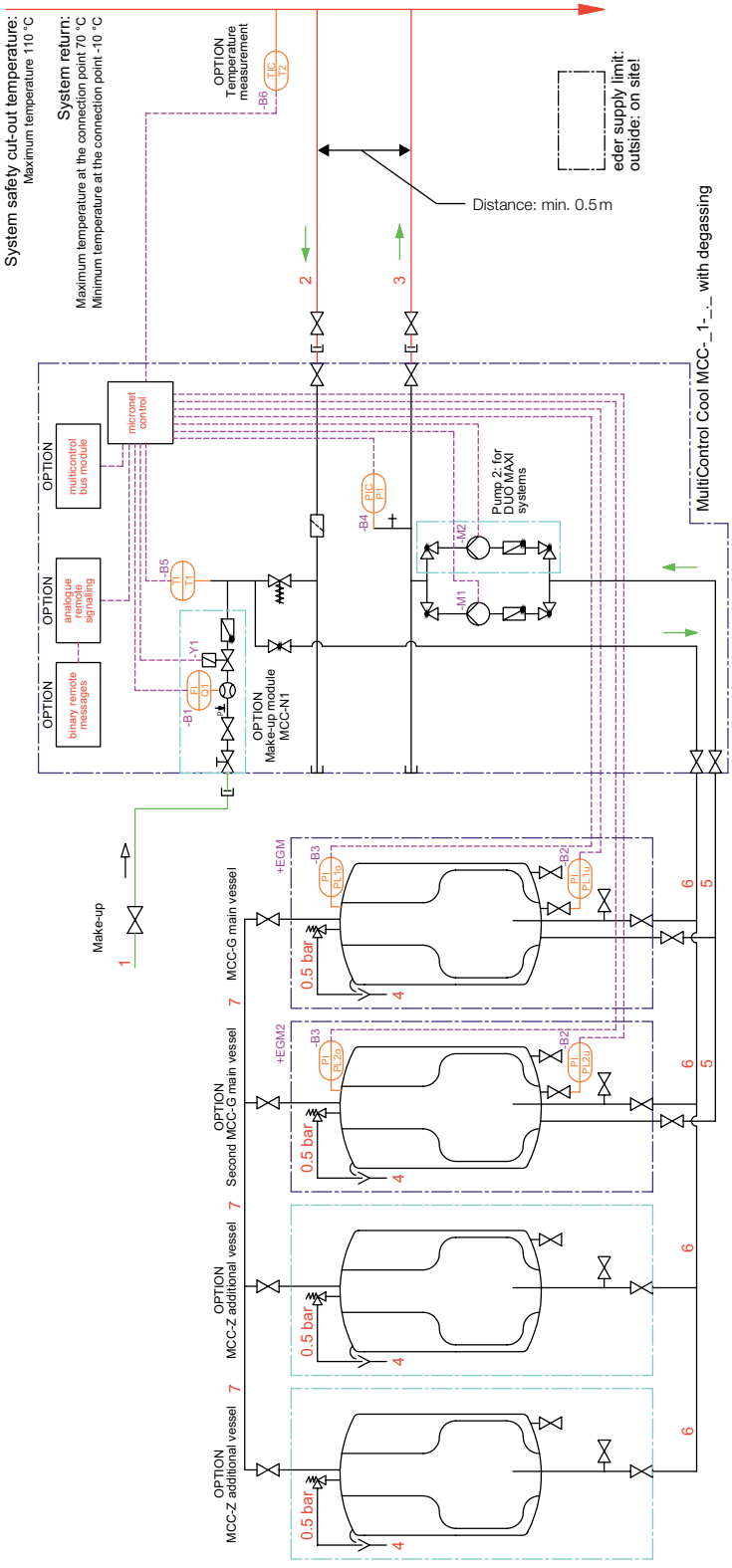

1. Fresh water supply
2. Expansion overflow line from the system return at least DN 25
3. Expansion pressure line to the system return, at least DN 25
4. Vessel safety valve drain pipe
5. Suction line from the expansion vessel
6. Overflow line to the expansion vessel
7. Gas-side vessel interconnection DN 20

Options:
2 x MCC-G main vessels with level measurement, 2 x EMCC-Z additional vessels, expansion modules, EMCC-N1 make-up module, T2 sensor

5.2. MULTICONTROL COOL EMCC without degassing function

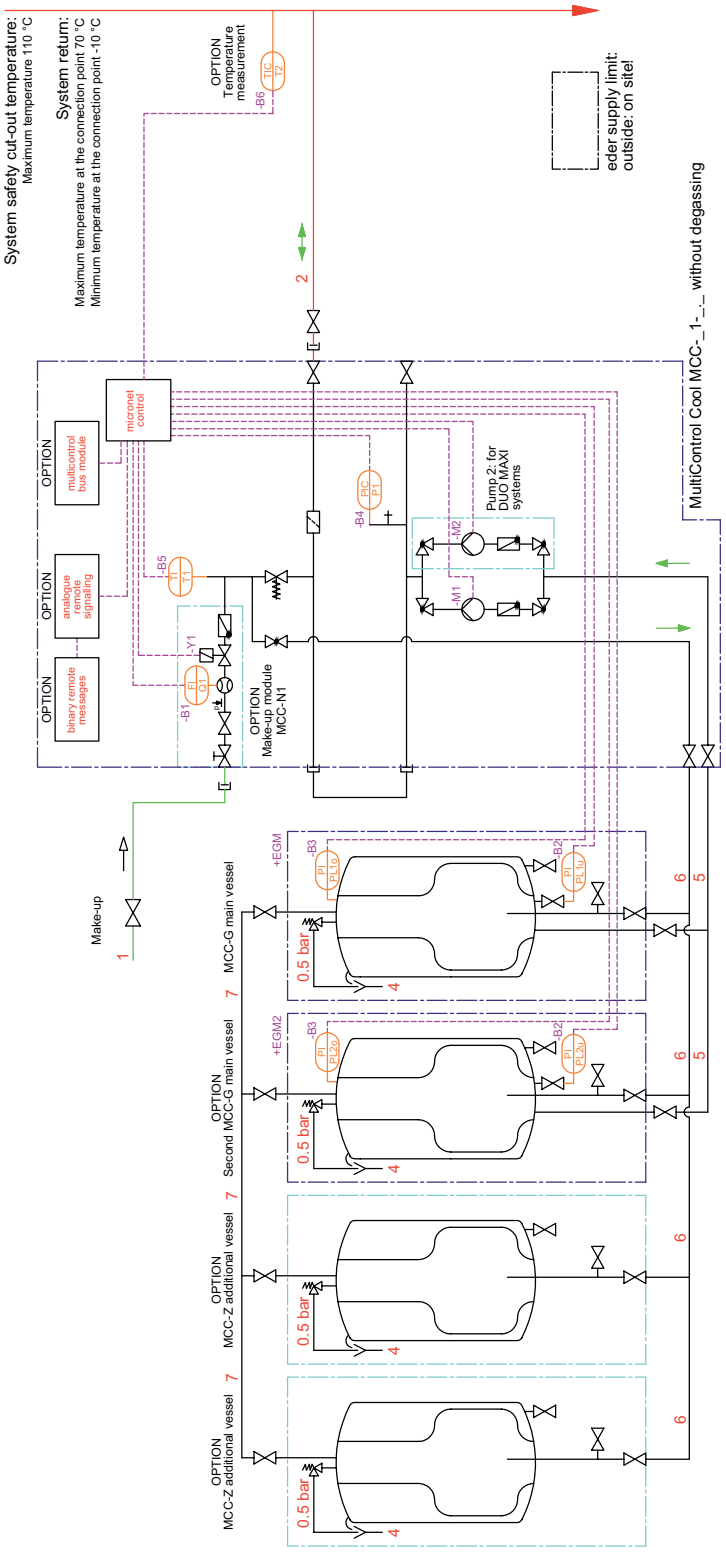

1. Fresh water supply
2. Expansion overflow line from the system return at least DN 25
3. Expansion pressure line to the system return, at least DN 25
4. Vessel safety valve drain pipe
5. Suction line from the expansion vessel
6. Overflow line to the expansion vessel
7. Gas-side vessel interconnection DN 20

Options:

2 x EMCC-G main vessels with level measurement, 2 x EMCC-Z additional vessels, expansion modules, EMCC-N1 make-up module, T2 sensor, bypass

5.3. MULTICONTROL COOL EMCC with degassing function and intermediate vessel

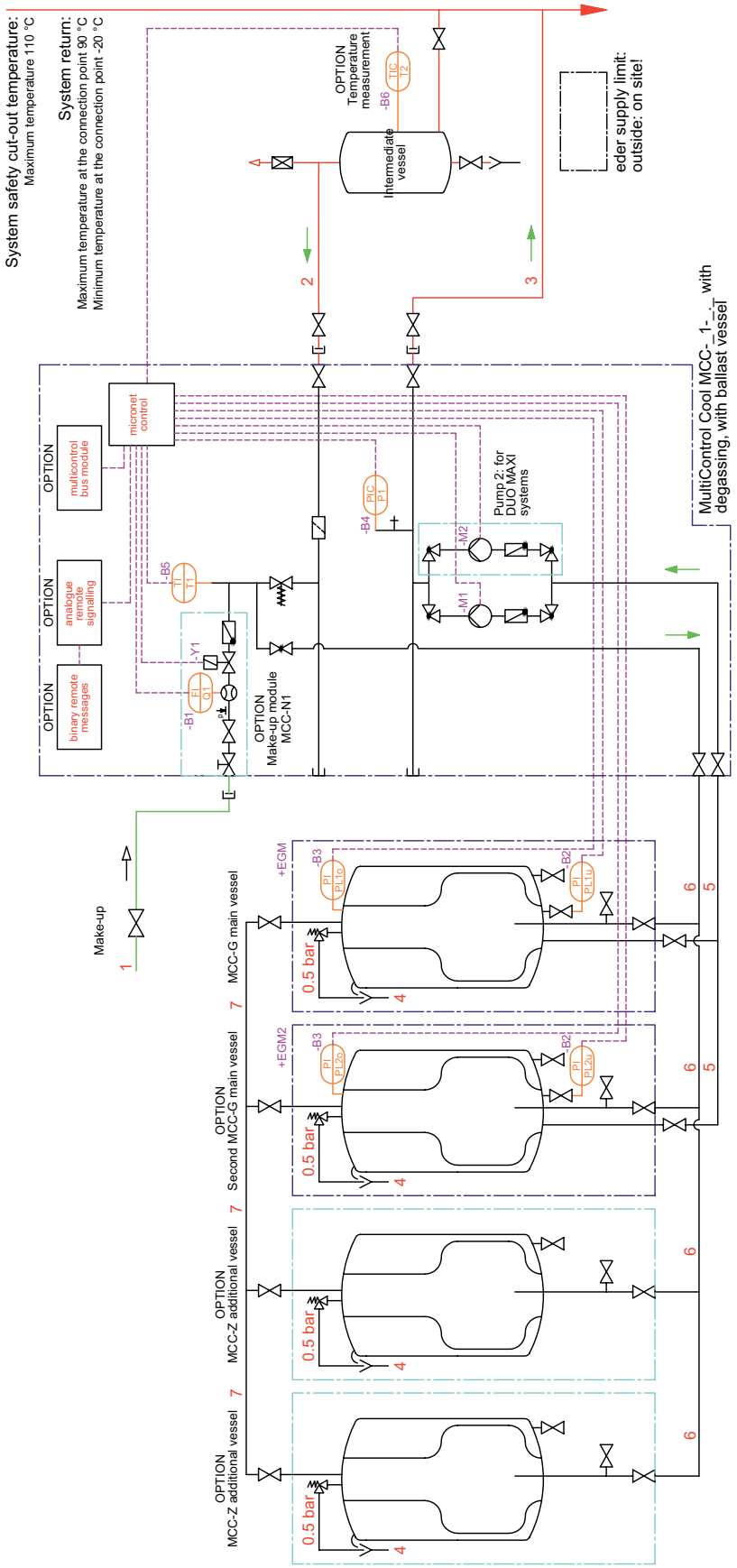

1. Fresh water supply
2. Expansion overflow line from the system return at least DN 25
3. Expansion pressure line to the system return, at least DN 25
4. Vessel safety valve drain pipe
5. Suction line from the expansion vessel
6. Overflow line to the expansion vessel
7. Gas-side vessel interconnection DN 20

Options:

2 x EMCC-G main vessels with level measurement, 2 x EMCC-Z additional vessels, expansion modules, EMCC-N1 make-up module, T2 sensor, intermediate vessel

6. CIRCUIT DIAGRAMS

6.1. MULTICONTROL COOL EMCC

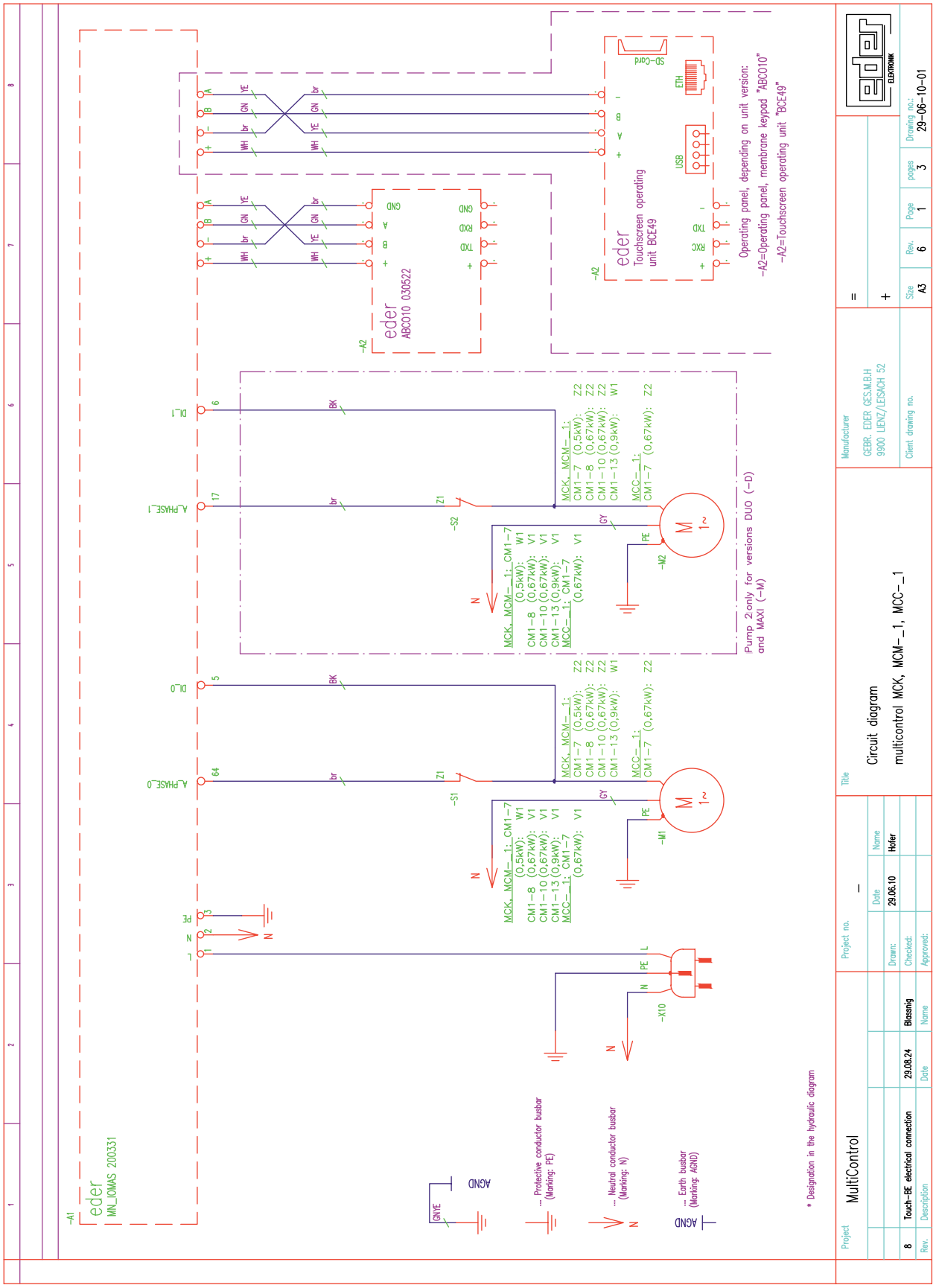

6.2. MULTICONTROL COOL EMCC

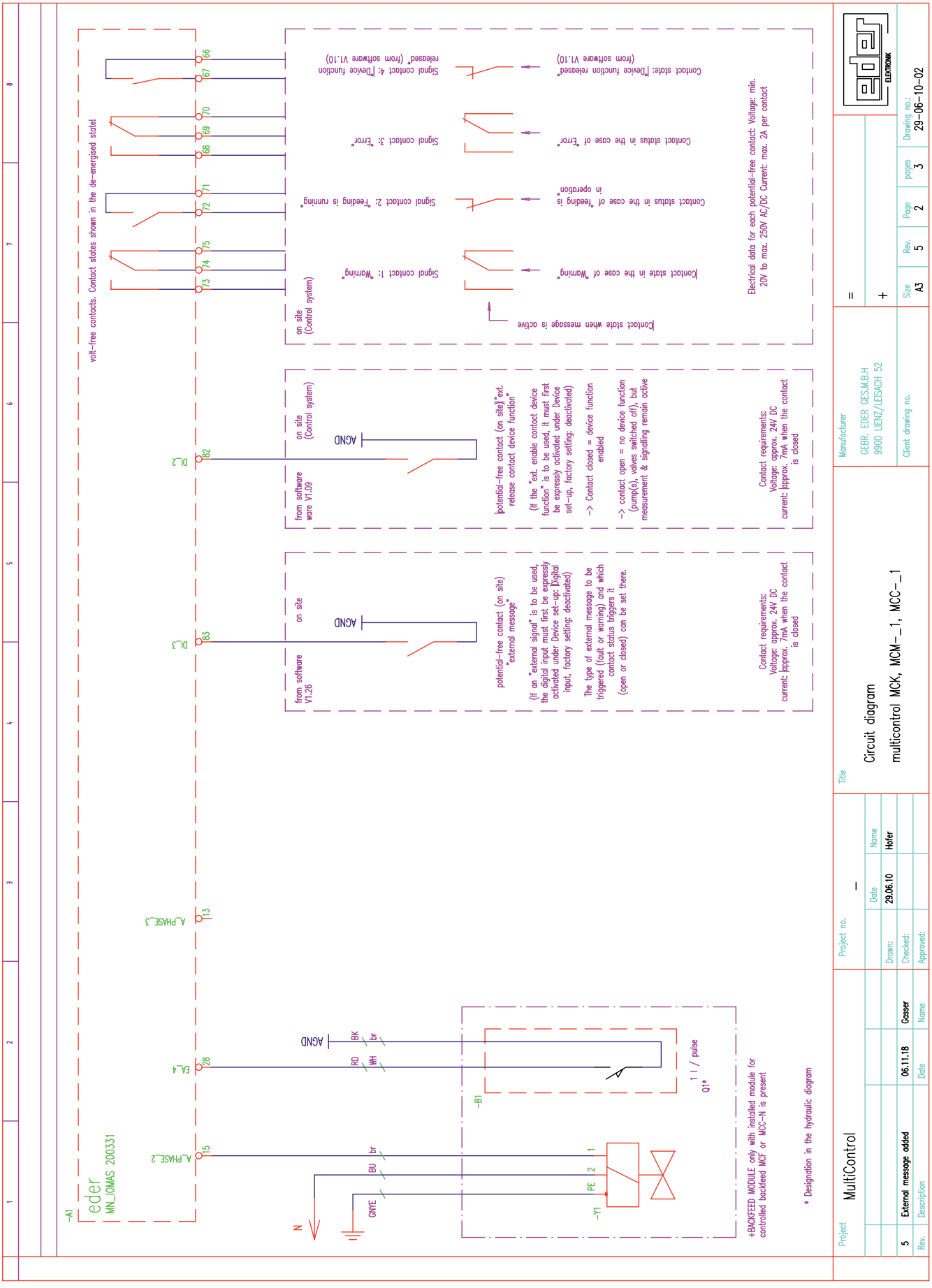

6.3. MULTICONTROL COOL EMCC

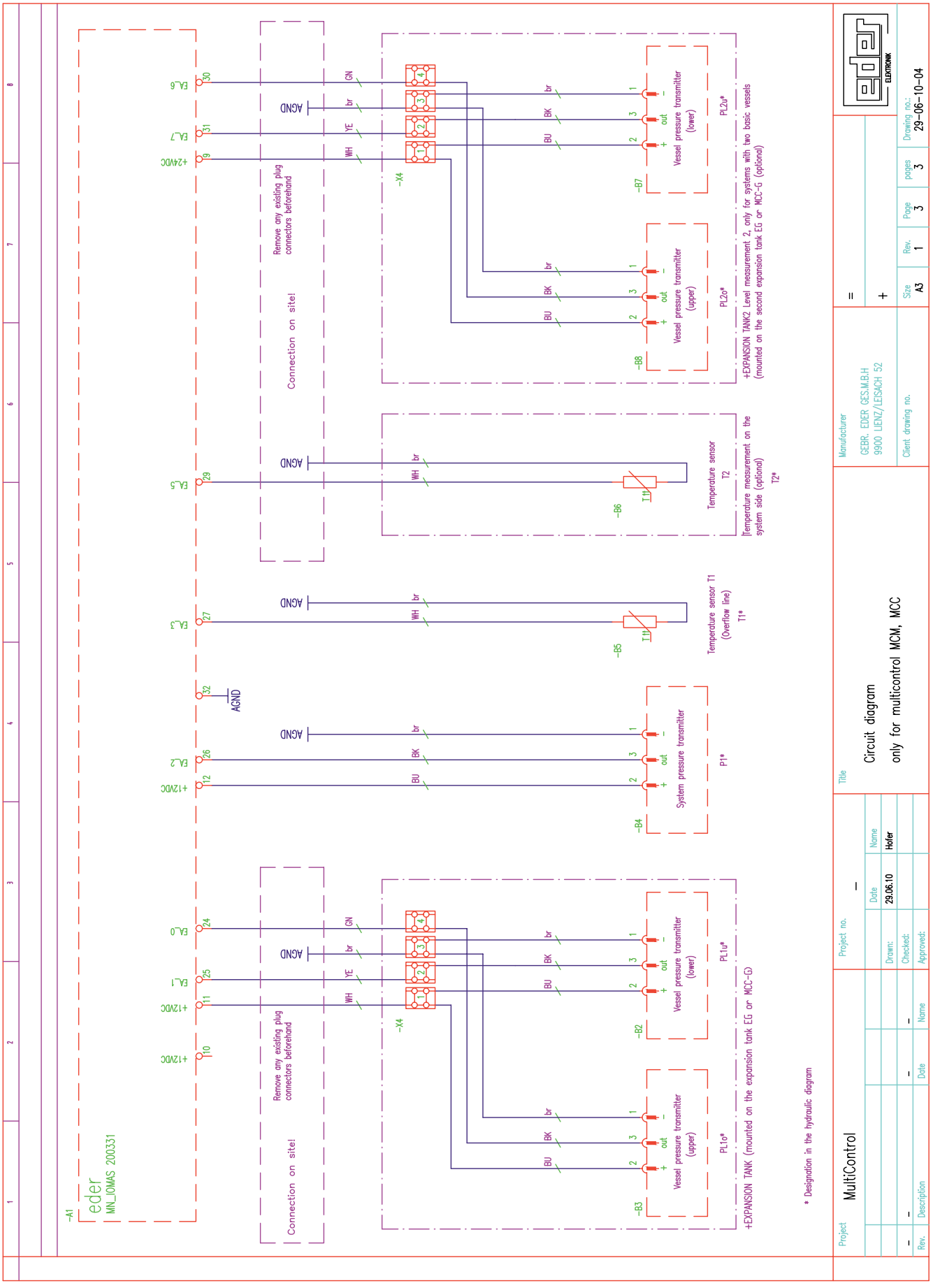

6.4. Legend - MULTICONTROL COOL EMCC

DESIGNATION	DESCRIPTION
-A1	Control electronics: MULTICONTROL main PCB, type 200331
-A2	Depending on the device version: Control electronics: Processor board MULTICONTROL, type ABCO10 Control electronics: Touchscreen operating unit, type BCE49
-S1	Motor pump 1: Thermal protection (integrated in the motor)
-S2	Motor pump 2: Thermal protection (integrated in the motor) (option)
-M1	Motor pump 1
-M2	Motor pump 2 (option)
-Y1	EMCC-N1 make-up module: Solenoid valve (option)
-B1	EMCC-N1 make-up module: Water meter pulse output (option)
-B2	Vessel pressure transmitter bottom (PL1u*)
-B3	Vessel pressure transmitter top (PL1o*)
-B4	System pressure transmitter (P1*)
-B5	Temperature sensor (T1*), sensor element KTY10-6 or compatible
-B6	Temperature sensor (T2*), sensor element KTY10-6 or compatible
-B7	Vessel pressure transmitter bottom (PL2u*) (option)
-B8	Vessel pressure transmitter top (PL2o*) (option)
-X4	Connection clamp

* Designation in hydraulic diagram

7. COMMISSIONING

7.1. Putting the device into operation

CAUTION
Commissioning of the device by the EDER factory customer service or an authorised partner, together with training of the system's operating personnel, is mandatory.

Proceed as follows when commissioning the MULTICONTROL COOL:

CAUTION
Steps 1-3 represent work to be carried out on site in preparation for commissioning.

Step 1:
Determination of the upper and lower working pressure. The upper working pressure is also the set pressure at the overflow valve.

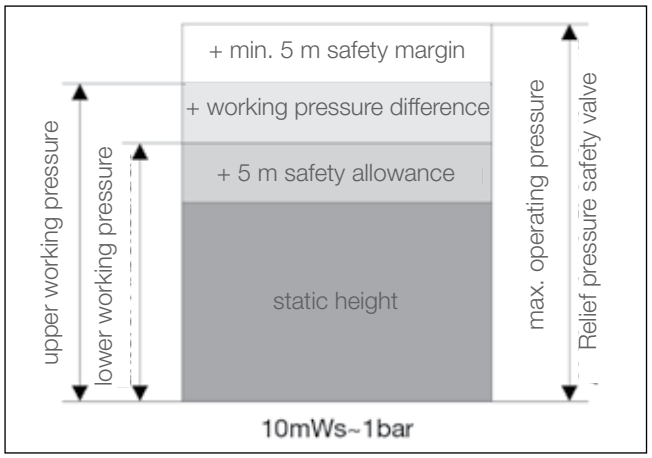

Figure 15: Determination of upper and lower working pressure

Step 2:
Shut off the lines from/to the system (expansion overflow line, expansion pressure line, fresh water supply).

WARNING
But do NOT shut off the suction line and overflow line from/to EMCC-G!

Step 3:
Fill and ventilate the system to the upper working pressure determined in step 1.

Step 4:
Check the hydraulic and electrical connections for correctness, especially the expansion pressure and expansion overflow line and flow direction at the point of integration.

Step 5:
At the EMCC-N1 make-up module, open the fresh water supply to the MULTICONTROL EMCC and set the pressure reducing valve to 1.5 bar - max. 2.0 bar.

Loosen the fixing screw (1) and set the pressure reducing valve to 1.5 bar - max. 2.0 bar. Then tighten the screw again to fix the setting of the pressure reducing valve (fig. 16).

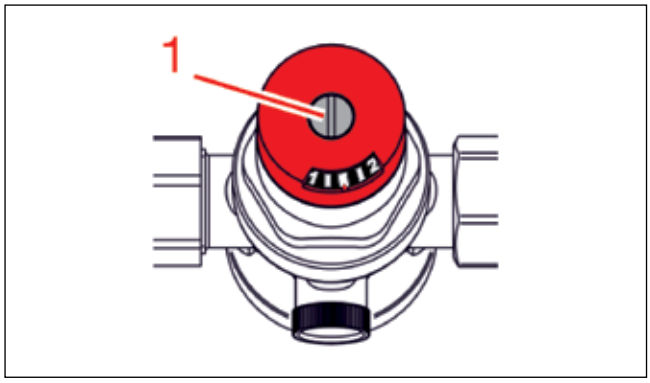

Figure 16: Pressure reducing valve at the MCC-N1

Step 6:
Switch on the power supply and check whether the device function is deactivated. If necessary, switch off the device function using the activate device function button (system ON/OFF).

Step 7:
Settings in the device setup allow the touchscreen operating unit to be customised to the components in the device and its range of functions. Some of the settings possible in the device setup have already been preconfigured in the factory. Further settings are made during commissioning or, if necessary, in the course of a component extension or component replacement (service/maintenance). Device setup: see touchscreen operating unit instruction manual, menu "Settings" "Device set-up".

NOTE
For device set-up, see "Touchscreen operating unit instruction manual".

Step 8:
Filling and venting the pressurising pump(s) and the piping
- Fully open the shut-off valves on the pump suction side (1) (are open ex works).
- Remove the filler hole plug (2).

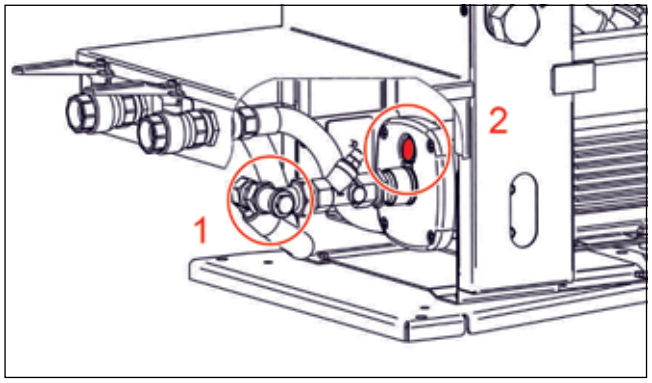

Figure 17: Venting the pressurisation pumps

- If an EMCC-N1 make-up module is fitted, switch to manual mode (operating level 3: Manual mode -> Outputs). Switch on the "make-up valve" output and fill the vessel with it until a continuous jet of the system medium emerges from the pump's vent valve, then set the "make-up valve" output back to automatic mode (Auto "1"). As a guideline, a vessel level of approx. 30-40% can be assumed here, at which the pump should be filled. During this filling process, the vessel level can be monitored in the basic display.

NOTE
Shut off all expansion vessels except the first main vessel beforehand to speed up the filling process.

- On units without a built-in EMCC-N1 make-up module, the system must be filled until the vessel is filled via the overflow valve and a continuous jet of system medium emerges from the filling bore of the pump. If necessary, reduce the factory-set upper working pressure at the pressure stabilising valve beforehand if the pressure in the system would otherwise rise too high (higher than the desired upper working pressure).
- Then switch the pressurisation pump on and off a few times in manual mode to achieve complete venting of the pump chambers ("Test" pump 1).
- Reinsert and tighten the plug in the filler hole of the pump (2).
- For devices with 2 pressurisation pumps (DUO and MAXI models), repeat the above steps for the second pump (pump 1 = left, pump 2 = right).
- Then open the drain cock in the pipework (to the right of the overflow valve) and switch the pumps on and off manually a few times to ensure that the pipework is completely vented. Then close the vent cock again.

Step 9:
Once the device set-up has been completed and the pump(s) have been vented, switch on the device function using the activate device function button (system ON/OFF).



Step 10:
Depending on the working pressure to be set, it may be necessary to adjust the pressurisation pump(s) on the pressure side (characteristic curve-dependent increase in delivery rate with decreasing pressure). An indication that adjustment is necessary may be, for example, if the overflow valve only closes completely at more than approx. 0.5 bar below the upper working pressure after the pump(s) have been switched off.

CAUTION
The pressurising pump(s) must always be adjusted before the working pressure is set. After this, neither the working pressure nor the adjustment may be changed! If the pump(s) are subsequently adjusted, the working pressure must be set again.

Step 11:
Set the working pressure:
- Open the shut-off valves from/to the system (expansion overflow line, expansion pressure line, fresh water). Depending on the size of the system, the pressure setting can take a long time, as the pressure must be propagated throughout the entire connected system in order to be sufficiently stable for the setting.
- Switch to operating level 3.

CAUTION
The connection from/to the system must be guaranteed for adjustment!

- Select "Settings" -> "Pressure maintenance" -> "Working pressure".
- The current setting is displayed; it corresponds to the last set working pressure (e.g. factory-set default values).

WARNING
Depending on the values displayed, the working pressure must always be set again during commissioning!

- After pressing the "CHANGE" button and confirming with "YES", the pump starts and the working pressure setting is active.
- Set the overflow valve to the upper working pressure determined in step 1. The currently measured pressure is displayed on the touchscreen of the Touchscreen operating unit.
  Set value adjustment at the valve clockwise = higher pressure, anticlockwise = lower pressure.
- Once the working pressure has been adjusted to the desired value and has stabilised, set the switching differential and accept the pressure setting using the OK button.

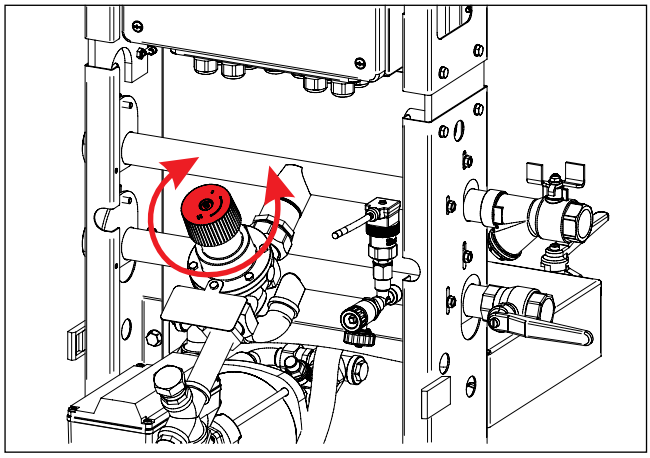

Figure 18: Set value adjustment for SOLO and MAXI devices

Step 12:
If an EMCC-N1 make-up module is fitted, the operating mode of the make-up module must be selected. This operating mode depends on various factors, such as the size of the system, the age of the system, any known leaks, etc.

In the case of known regular leaks (e.g. if it is known that a certain quantity needs to be refilled within a certain time), we recommend the "Time-controlled" operating mode.

A description of the possible EMCC-N1 operating modes can be found in the instruction manual for the touchscreen operating unit.

CAUTION
With chilled water systems, particular attention must be paid during commissioning to the current temperature situation of the overall system. If the refrigeration plant is not yet in operation, level L (contents of the expansion vessel(s)) must be filled to a relatively high value, because once the refrigeration plant starts the level will fall through pressurisation as the system medium cools down (guide value: 70%). Adequate initial filling is particularly important on units without a built-in make-up module!

Step 13:
The device is ready for operation.

The shut-off valves in the pipes from/to the system must be secured against unintentional closing (e.g. remove handles...).

Further settings (e.g. softening MWE, operating modes, etc.) can be made in the "Settings" menu of the touchscreen operating unit.

NOTE
A detailed description of the function, operation, menu structures and display of the touchscreen operating unit can be found in the separate instruction manual.

8. THERMAL INSULATION

MULTICONTROL COOL series expansion and pressurisation systems are designed specifically for use in chilled water systems, or in systems in which condensation occurs on system components.

The EMCC-G/EMCC-Z expansion vessels are built in such a way that thermal insulation (to be provided on site) up to a thickness of 40 mm is possible. If the system operator does not want condensation to occur, appropriate insulation is necessary. Particular care must be taken to ensure that all seams and joints in the insulation are carefully executed and bonded. The entire surface of the vessel and of the mounted fittings must be insulated. If this is not done, condensation can form in the gap between the component concerned and the insulating layer. We recommend having the insulation carried out by a suitably qualified specialist company.

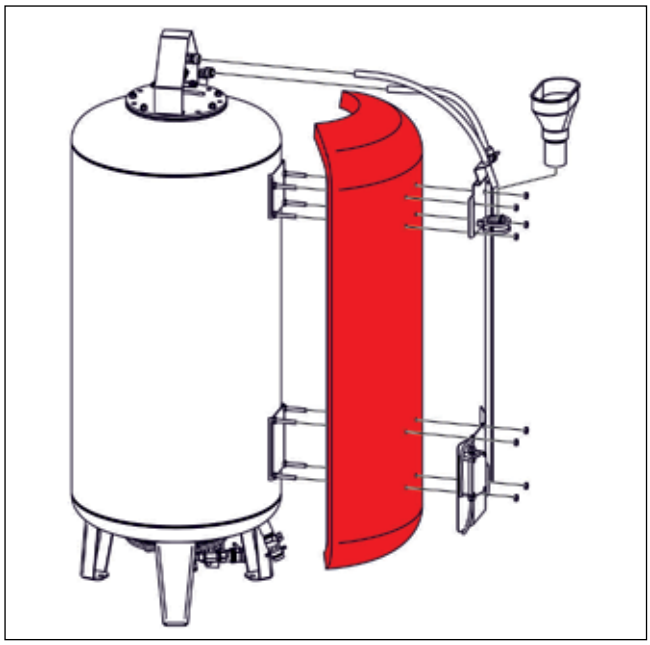

Figure 19: Thermal insulation

To determine the thickness of the insulating layer, the lowest temperature of the system medium, the relative humidity and the highest possible ambient temperature at the installation site must be taken into account. The calculation is the responsibility of the specialist company concerned.

CAUTION
For servicing purposes it may be necessary to gain access to the vessel flange covers. Depending on how the on-site insulation is executed, it may be partly impaired or have to be removed. This must be accepted in the event of servicing; it cannot be avoided by the service engineer carrying out the work, nor can it subsequently be reinstated!

9. ACCESSORIES

9.1. Drip tray

MULTICONTROL COOL series expansion and pressurisation systems are designed specifically for use in chilled water systems, or in systems in which condensation occurs on system components.

Owing to the construction of the EMCC control unit, it is not possible to insulate it completely thermally or to prevent condensation on individual components (e.g. pipework). The EMCC-G/EMCC-Z expansion vessels are built in such a way that thermal insulation (to be provided on site) is possible. If this is not carried out, however, condensation can also occur on the expansion vessels under certain operating conditions.

To ensure that this condensate is collected in a controlled manner, the use of what are known as drip trays is recommended. These are optionally available as accessories.

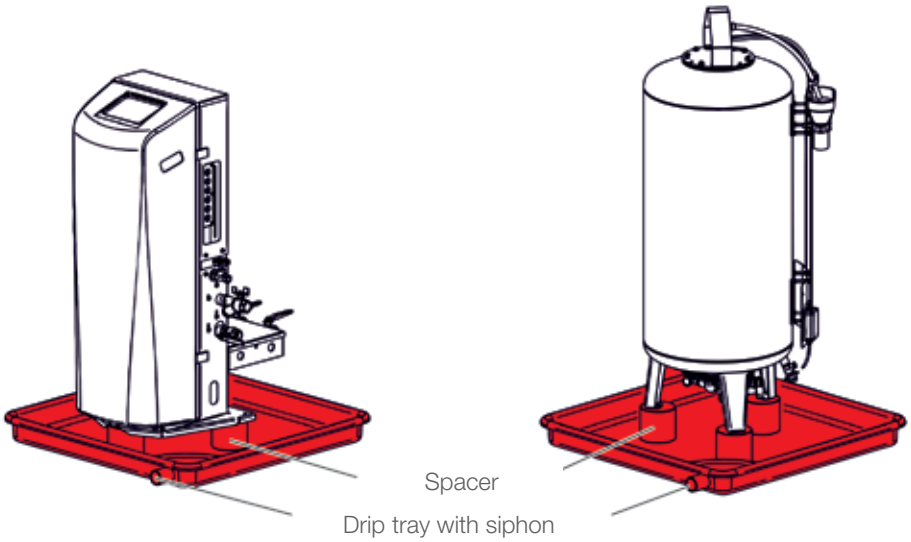

Figure 20: MULTICONTROL COOL drip tray

The drip tray and spacers are made of HDPE (high density polyethylene). This material is resistant to ultraviolet radiation (UV), mineral greases and oils, alkalis, acids, petrol, diesel, ... The permissible temperature range is -50 to +80 °C for continuous loading, with a softening temperature of approx. 100 °C.

NOTE
The use of drip trays is always advisable in principle (not only for systems in which condensation occurs). For example, system medium escaping during maintenance can also be safely caught and collected.

10. CLEANING AND MAINTENANCE

10.1. Cleaning

During operation, dirt particles are separated from the system at the built-in strainer. These impurities are gathered in the strainer and are consequently lead to the reduced passage of the strainer. This may cause problems with the function of the device.

CAUTION
If problems with contamination occur frequently or constantly, further measures should be considered for the system (e.g. replacement and flushing of the system contents, installation of additional filters or sludge separators, etc.). These measures have a positive effect on all installed devices with direct contact with the medium, not just the pressurisation system.

The dirt particles separated by the strainer must therefore be removed at regular intervals by removing and cleaning the strainer screen. This inspection and cleaning of the strainer must be carried out at least twice a year! However, if there are any problems with the function of the device, the strainer must be cleaned first of all!

Problems and malfunctions caused by failure to clean the strainer as prescribed are excluded from any warranty claims.

10.2. Maintenance

The device must undergo maintenance at least once a year or when a warning "W03" is displayed! Carrying out this maintenance is the responsibility of the operator.

CAUTION
If this annual maintenance cannot or is not to be carried out by the system operator, suitably qualified personnel or the EDER factory customer service must be commissioned to do so.

NOTE
It is recommended that the maintenance be carried out by the EDER factory customer service. The conclusion of a maintenance contract is highly recommended.

Problems or malfunctions caused by non-compliance with the prescribed maintenance intervals or lack of maintenance are excluded from any warranty.

Work to be carried out in the course of maintenance:

- Check and document whether the regular cleaning according to 11.1 is carried out and document when this was last done; Carry out cleaning in any case!
- Ask the operator and document whether any abnormalities or problems have occurred since the last maintenance. These must be rectified if necessary!
- Check the check valve(s) for correct closure.
- Check the overflow valve for correct function and correct closing.
- Desludging: Connection (1) on the lower vessel flange or in the overflow line on the vessel.

- Open the drain (2) outside the membrane and drain any medium present. If fluid is constantly leaking, the diaphragm may be defective: check!
- Flush the connection (3) of the vessel pressure transmitter; Open the black plastic stopper and rinse out of the vessel until any impurities have been rinsed out. Then close the plug again.

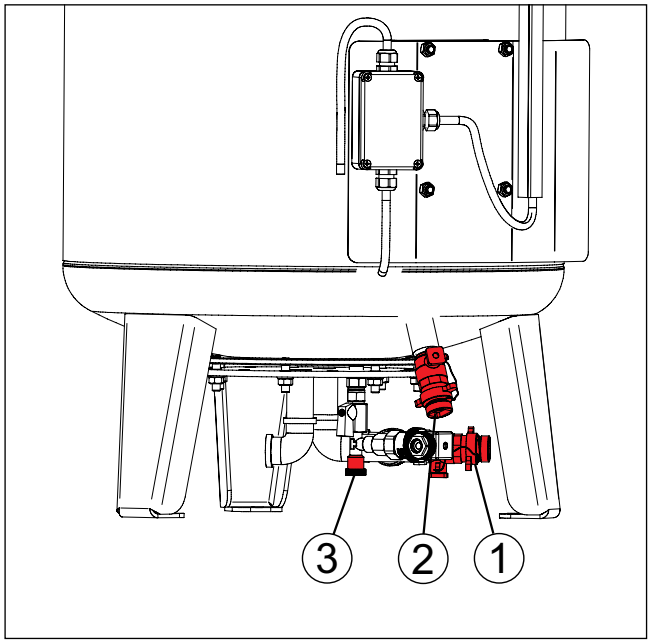

Figure 21: Maintenance of the vessels

11. SPARE PARTS LIST

11.1. Cover and expansion vessel

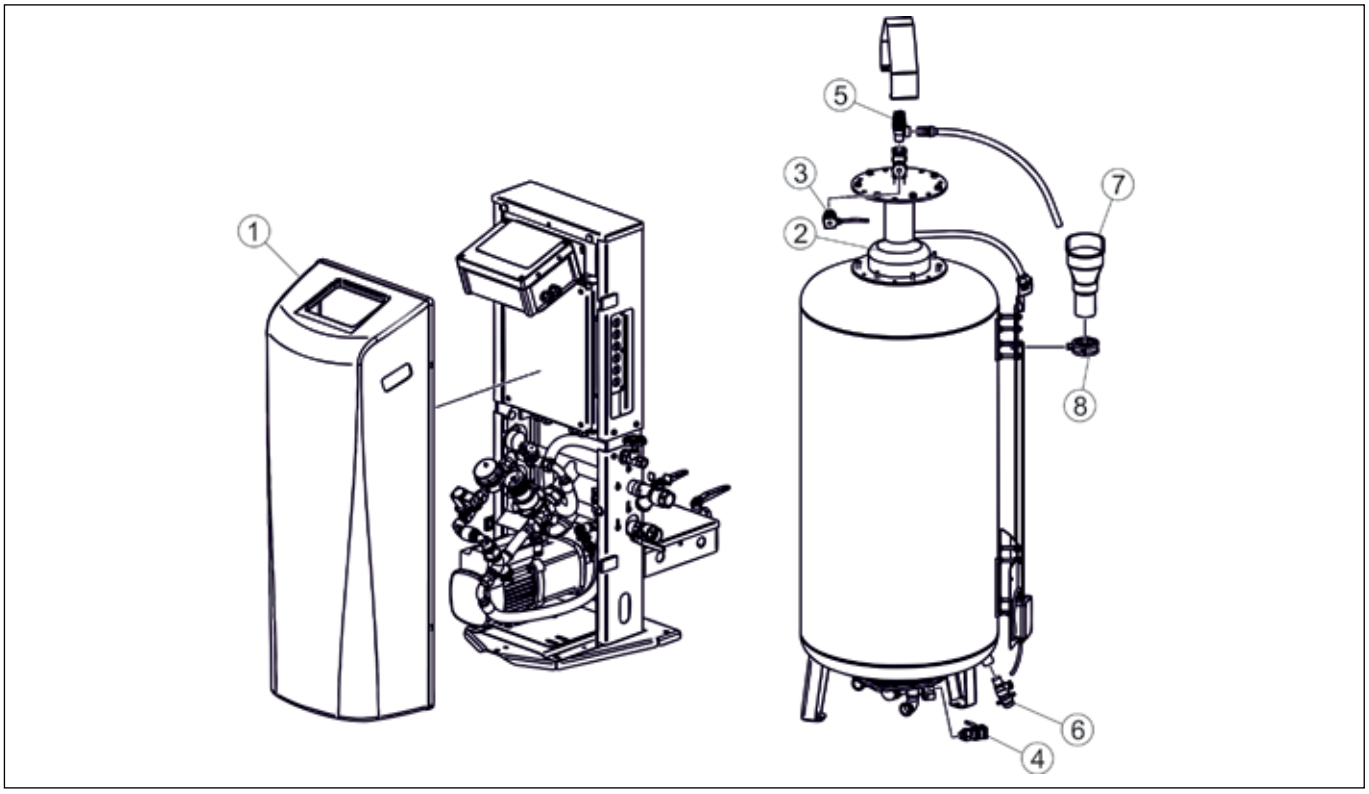

Figure 22: Spare parts, cover and expansion vessel

POS.	DESIGNATION	SPARE PART ART. NO.				
		EMCC-S1-__ EMCC-M1-__ EMCC-D1-__	EMCC-G 125 EMCC-Z 125	EMCC-G 200 EMCC-Z 200	EMCC-G 300 EMCC-Z 300	EMCC-G 500 EMCC-Z 500
1	MULTICONTROL plastic cover, incl. 4 snap fasteners (2 pieces each)	90918	-			
2	Membrane	-	90430	90480	90481	90450
3	Vessel pressure transmitter top	-	90141			
4	Vessel pressure transmitter bottom	-	90141			
5	Safety valve 0.5 bar	-	90596			
6	Drain cock 1/2" - 3/4"	-	90915			
7	Drain funnel 50	-	90916			
8	Fixing clamp for drain funnel 50	-	90917			

11.2. Piping

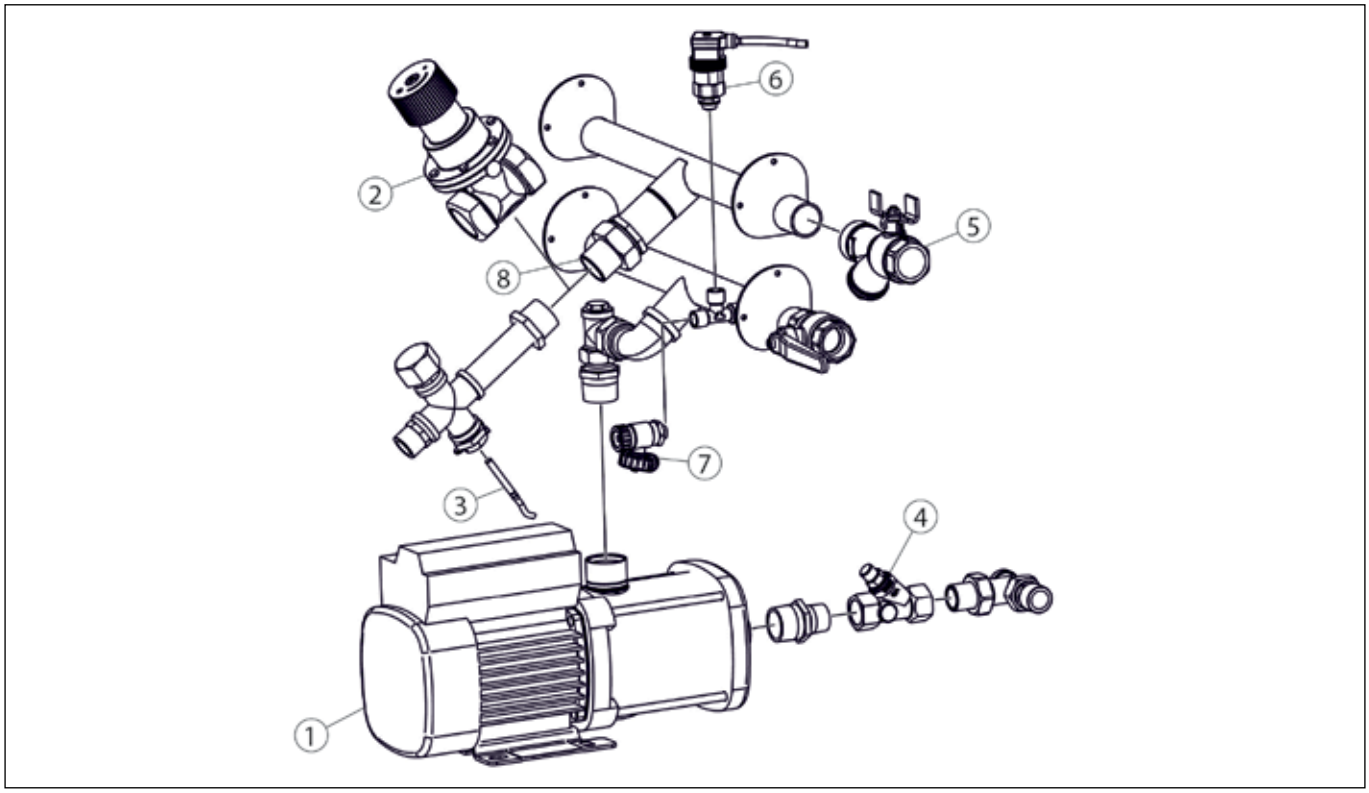

Figure 23: Spare parts for piping

POS.	DESIGNATION	SPARE PART ART. NO.			
		EMCC-S1-4.0 EMCC-M1-4.0	EMCC-S1-5.6 EMCC-M1-5.6	EMCC-D1-4.0	EMCC-D1-5.6
1	Pump - CM 1-7 B-R-I-E, 1x230 V~/50 Hz	90967			
2	Overflow valve	90011	90603	90650	90121
3	Temperature sensor for MC	90911			
4	Angle seat check valve	90547			
5	Strainer, 1", with isolating valve	90912			
6	System pressure transmitter	90140			
7	Drain ¼" - ¾"	90914			
8	Overflow valve - screw connection 1'' male thread - 5⁄4'' female thread, flat-sealing	90913			

11.3. Electronics

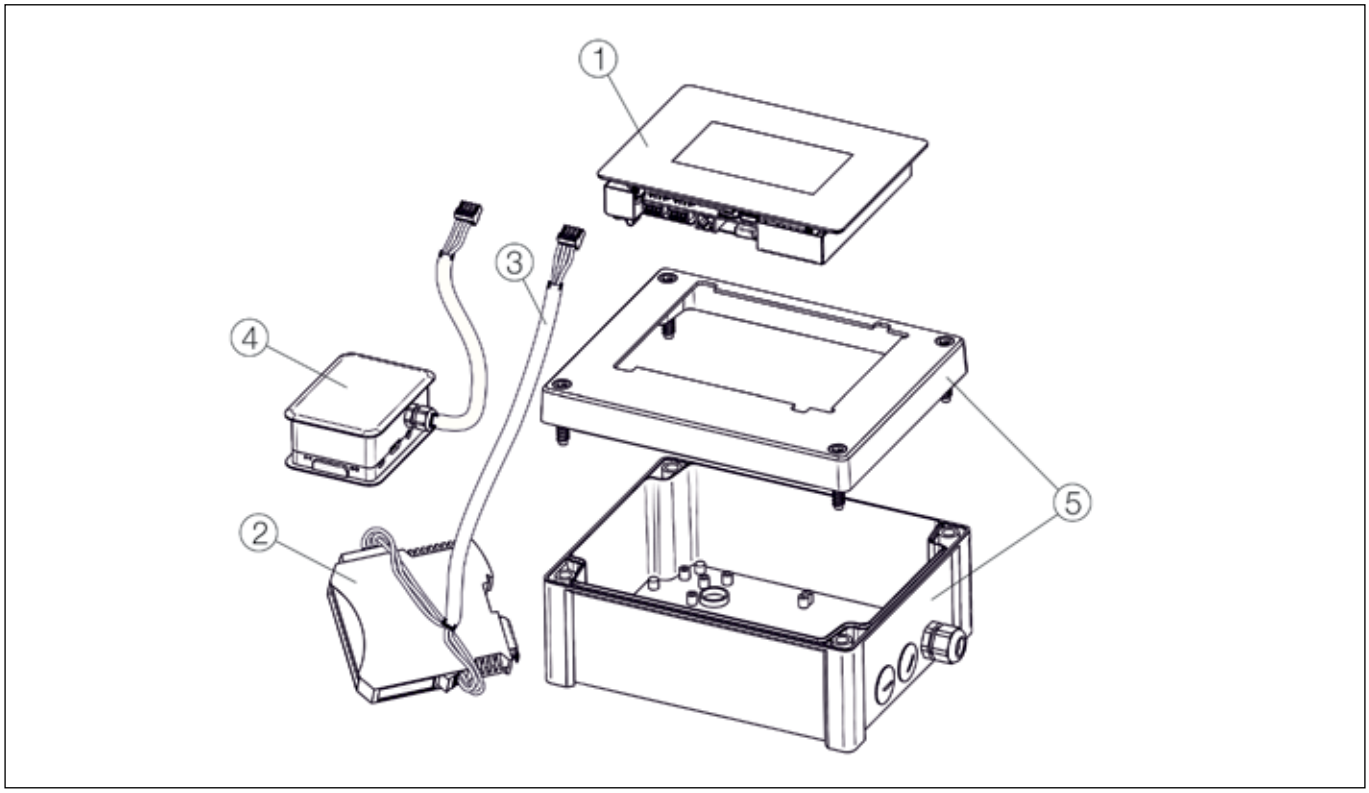

Figure 24: Spare parts control housing

POS.	DESIGNATION	SPARE PART ART. NO.
		EMCC-S1-__ EMCC-M1-__ EMCC-D1-__
1	Touchscreen operating unit, type BCE49, incl. shielding plate	90996
2	MULTICONTROL Bus Module Profibus	(optionally available as an accessory)
2	MULTICONTROL Bus Module Modbus RTU RS485	(optionally available as an accessory)
2	MULTICONTROL Profinet Bus Module	(optionally available as an accessory)
2	MULTICONTROL Bus Module Modbus TCP	(optionally available as an accessory)
3	Connection cabling for bus module	(included in the scope of delivery of the bus module)
4	MULTICONTROL web module	(optionally available as an accessory)
5	Touchscreen operating unit - MULTICONTROL operating housing (base + cover), machined, empty	90997

WARNING
Simultaneous use of bus module and web module is not possible!

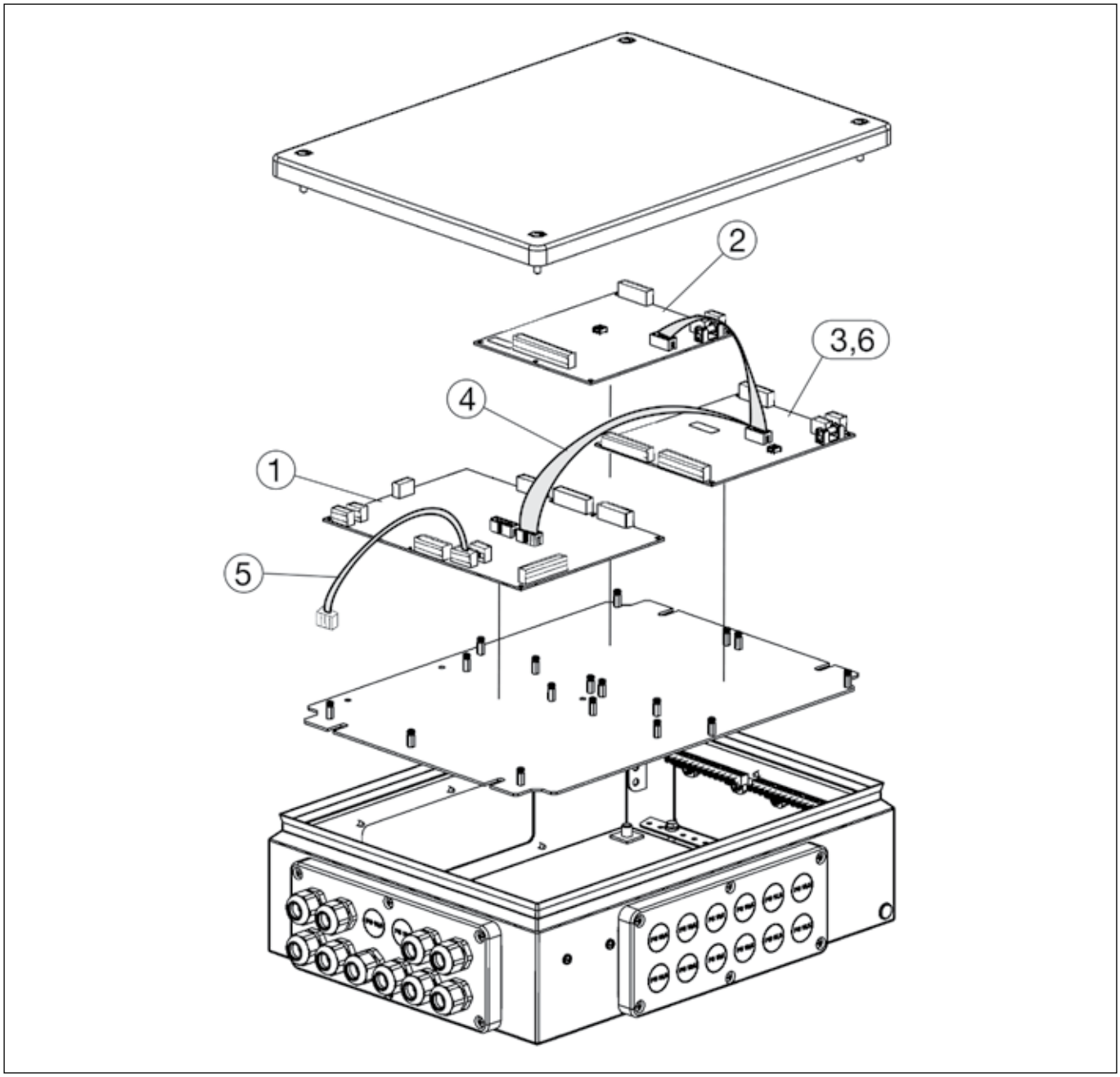

Figure 25: Spare parts control cabinet

POS.	DESIGNATION	SPARE PART ART. NO.
		EMCC-S1-__ EMCC-M1-__ EMCC-D1-__
1	Print - MULTICONTROL main PCB, type 200331	90903
2	Print - "Analogue remote signalling" expansion module	90624
3	Print - "Binary remote signalling" expansion module	90625
4	Connection cable main PCB to expansion board, 10-pole, 3 connectors	90965
5	Connection cable 4-pole, shielded Main PCB-operating unit, without plug	90994
6	Print - Expansion module "Binary remote signalling & remote acknowledgement"	90626

11.4. EMCC-N1 make-up module

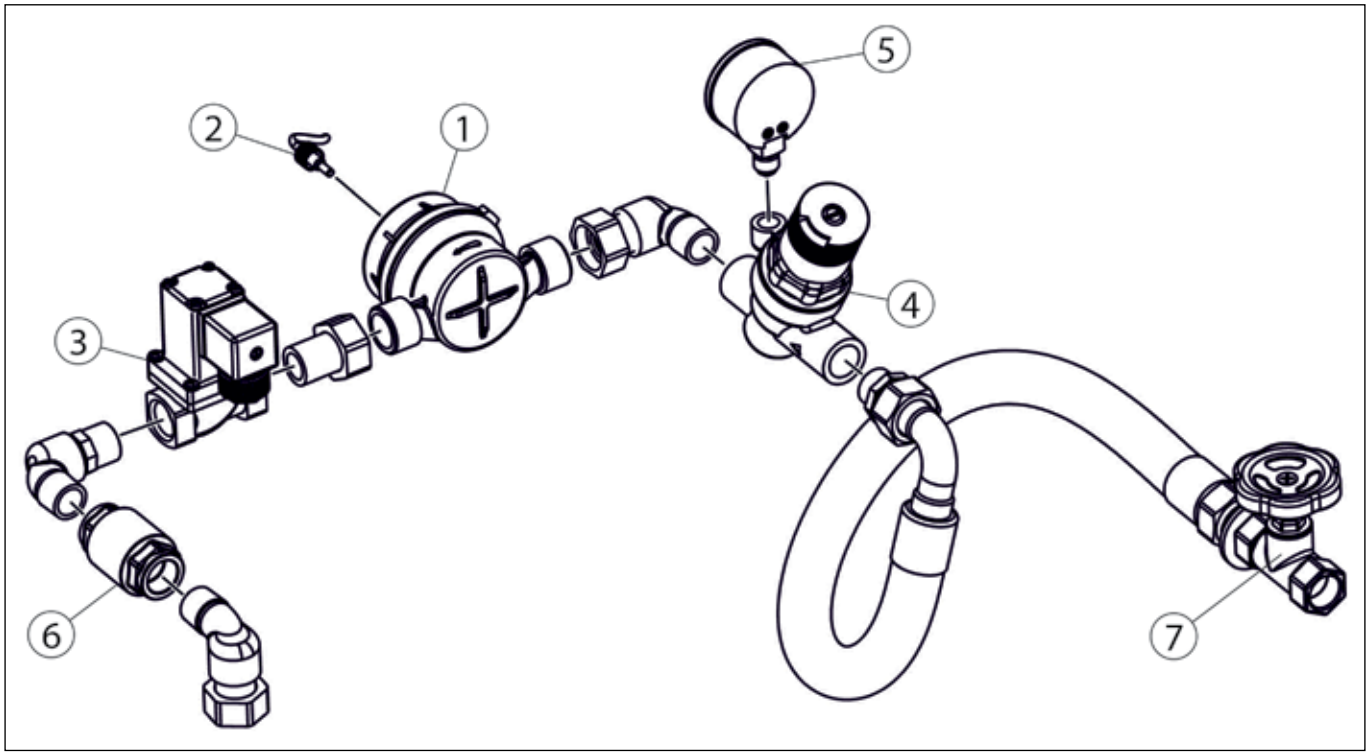

Figure 26: Spare parts MCC-N1 make-up module

POS.	DESIGNATION	SPARE PART ART. NO.
		EMCC-N1
1	Water meter 1.5 m^3/h, version B	90950
2	Water meter contact module 1 litre/pulse plug-in, for meter version B	90949
3	Solenoid valve	90575
4	Pressure reducing valve, ½", type D05	90952
5	Pressure gauge	90908
6	Check valve	90620
7	Flow valve with handwheel, ½"	90694

12. CERTIFICATES

12.1. CE declarations of conformity

CE

EG-Konformitätserklärung
EC Declaration of Conformity

EDER

im Sinne der Richtlinie(n):	**in accordance with the directive(s):**
- 2006/42/EG über Maschinen	- 2006/42/EC on machinery
- 2014/30/EU über die elektromagnetische Verträglichkeit	- 2014/30/EU relating to electromagnetic compatibility
- 2014/35/EU über die Bereitstellung elektrischer Betriebsmittel zur Verwendung innerhalb bestimmter Spannungsgrenzen auf dem Markt	- 2014/35/EU relating to the making available on the market of electrical equipment designed for use within certain voltage limits
- 2011/65/EU Verwendung bestimmter gefährlicher Stoffe in Elektro- und Elektronikgeräten (RoHS 2) gemäß Anhang II (gültig ab 22.07.2019) nach Änderungen der Richtlinie (EU) 2015/863	- 2011/65/EU use of certain hazardous substances in electrical and electronic equipment (RoHS 2) as per Annex II (valid from 22 July 2019) acc. to the amendments of the directive (EU) 2015/863

Der Hersteller / **The manufacturer**

Eder Spirotech GmbH
Leisach 52
A - 9909 Leisach

erklärt hiermit, dass das Produkt / **declares hereby, that the product**

multicontrol cool MCC

mit dem (optionalen) Zubehör / **with the (optional) accessories**

Expansionsgefäß	multicontrol cool MCC-G	expansion vessel
Nachspeisemodul	multicontrol cool MCC-N	makeup module

entwickelt, konstruiert und gefertigt wurde in Uber-einstimmung mit der/den oben genannten Richtlinie(n).

has been developed, designed and manufactured in compliance with the above listed directive(s).

Folgende harmonisierten und nationalen Normen und Spezifikationen sind angewandt:

The following harmonised and national standards and specifications have been applied:

- ÖNORM EN ISO 12100:2013
- ÖVE EN 60204-1:2019
- EN 61000-6-2:2005
- EN 61000-6-3:2007 +A1:2011 +AC:2012
EN 61326-1:2013
EN 61000-3-2:2014
EN 61000-3-3:2013
ÖNORM EN 60335-1:2012 + AC:2014
ÖVE ÖNORM EN 60730-1:2012

Leisach, 03.02.2022
Ort, Datum

Ing. Hans Jacobs, Geschäftsführer
Unterschrift

13. APPENDIX

13.1. Sizing the expansion line

Expansion lines are pipes that connect the system to the expansion and pressure maintenance system.

NOTE
The design criterion is the nominal heat output to be dissipated, the maximum operating temperature and the flow velocity according to ÖNORM H 5151-1:2010 12 15.

Extract from ÖNORM H 5151-1:2010 12 15:

11.2.3.2 Sizing the expansion line (expansion line).

The following points must be observed when sizing the expansion line:

- The nominal heat output of the heat supply system applies to the sizing of the expansion line.
- For systems with a nominal heat output of less than 500 kW, the minimum nominal diameters can be retrieved from the adjacent table.

DN	NOMINAL HEAT OUTPUT IN KW
20	up to 120
25	over 120 to 500

Minimum nominal diameter of expansion lines

The maximum flow velocity in the expansion line must not exceed 0.15 m/s.

NOTE
If the heat supply and heat distribution systems are separated, there may be a small volume of water in the heat supply system. It may therefore be necessary to size the expansion line using the maximum flow velocity.

The calculation of the flow velocity in the expansion line must be based on the percentage temperature-dependent increase in volume V_e from the filling water temperature (10°C) to the protection temperature θ_{TZ} and the total content of the system V_A.

The heating time t_A, which is required to reach the safety cut-out temperature θ_{TZ} and the total volume of the system V_A, is calculated according to equation A:

$$t_A = \frac{(V_A \cdot \Delta\theta_{TZ} \cdot c_W \cdot \rho_W)}{\Phi_N}$$

c_w	spec. heat capacity of heating water at Θ_{TZ}	[kJ (kg . K)]
Θ_N	Rated heat output	[kW]
ρ_w	Density of the heating water at Θ_{TZ}	[kg/m3]

Equation A

The expansion volume flow V_e is calculated according to equation B:

$$\dot{V}_e = \frac{V_e}{t_A \cdot 1000}$$

Equation B

The calculation inner diameter of the expansion line is calculated according to equation C:

$$d_{AI} = \sqrt{\frac{4 \cdot \dot{V}_e}{\pi \cdot v}} \cdot 1000$$

Equation C

The next larger nominal pipe diameter must be selected. The maximum pressure loss in the expansion line must not exceed 1 kPa.

CAUTION
Within the pressure maintenance system (overflow line, suction line), the manufacturer decides which flow velocities ensure problem-free functioning of the pressure maintenance system.
The maximum flow velocities are therefore 0.75 m/s in the overflow line and 0.50 m/s in the suction line.

13.2. Details of the connection of MULTICONTROL EMCC to EMCC-G/Z

On MULTICONTROL COOL series units, the expansion volume is stored in EMCC-G series expansion vessels and, where applicable, in matching EMCC-Z additional vessels.

The individual devices must always be connected in accordance with the required hydraulic connection diagram in chapter 6.

For the pressurisation system to function properly, the following notes must be observed when connecting EMCC to EMCC-G/Z!

Ensure that the respective connections are connected correctly!
On EMCC-G and EMCC-Z expansion vessels there are internal fittings at the lower vessel flange which are required for proper degassing operation.

The overflow line (5) of the EMCC control unit must therefore always be connected to the overflow line (5) at the EMCC-G expansion vessel. The same applies to the suction line (6)!

NOTE
- Overflow line EMCC = overflow line EMCC-G
- Suction line EMCC = suction line EMCC-G

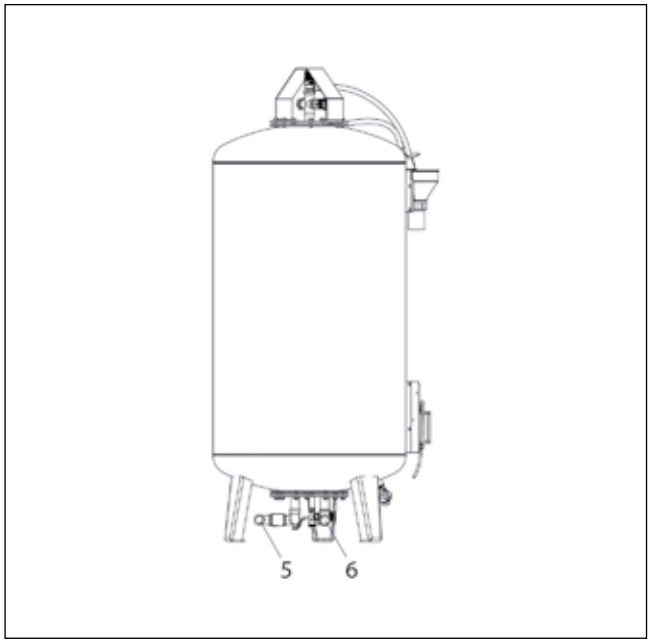

Figure 27: Overflow line (5) and suction line (6) from MCC-G

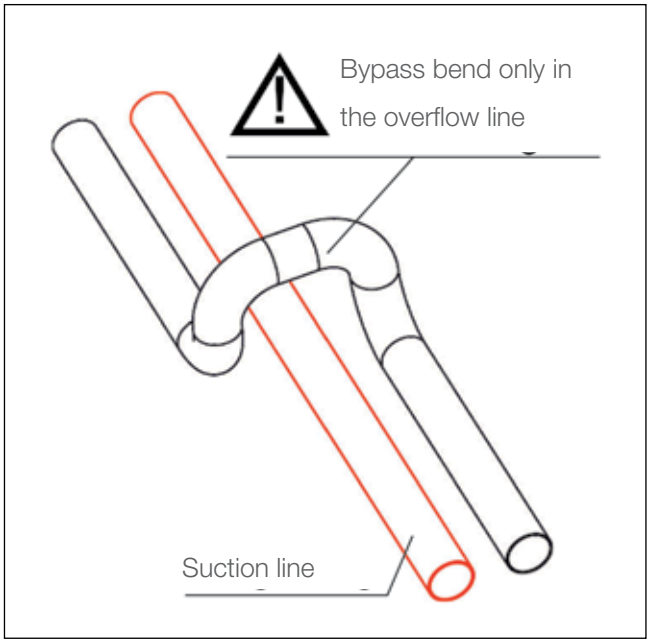

Figure 28: Laying the suction line

Laying the suction line
In some cases the overflow line and the suction line may have to be crossed over in order to connect EMCC and EMCC-G/Z correctly. It is important to ensure that the suction line is laid without constant differences in level.

If differences in level between EMCC and EMCC-G/Z cannot be avoided, care must at least be taken to ensure that the suction line is laid rising from the EMCC towards the EMCC-G/Z.

CAUTION
Avoidance bends, jump bends etc. required for the crossing may only be implemented in the overflow line.

NOTES

MAXIMISING PERFORMANCE FOR YOU

Copyright ©
All rights reserved. No part of this manual may be reproduced and/or published on the Internet, by means of printing, photocopying, microfilm or in any other way without the prior written permission of Spirotech bv.

Spirotech bv
P.O. Box 207
5700 AE Helmond, NL
T +31 (0)492 578 989

www.spirotech.com

SPIROTECH

76.864_00