Product data sheet Spirotech

Product name

EMCM Duo-6 max 10,1bar

Article number

EMCM-D6-10.1

Product properties

The MultiControl Modular DUO is an automatic expansion and pressure-maintaining device. The unit contains 2 pumps (2x 50%) and 1 overflow valve. An unpressurised expansion tank is required.

- 2 pumps (2x 50%)
- 1 overflow valve (1x 100%)
- At least 1 unpressurized expansion vessel needs to be added
- Operational pressure range up to 4.0 to 16.0 bar
- The maximum temperature at the point of connection: 70°C (over 70°C possible with auxiliary tank)
- Maximum safety temperature in the system: 110°C
- Maximum operating pressure (PN) up to: 25 bar

Product image

Product dimensions

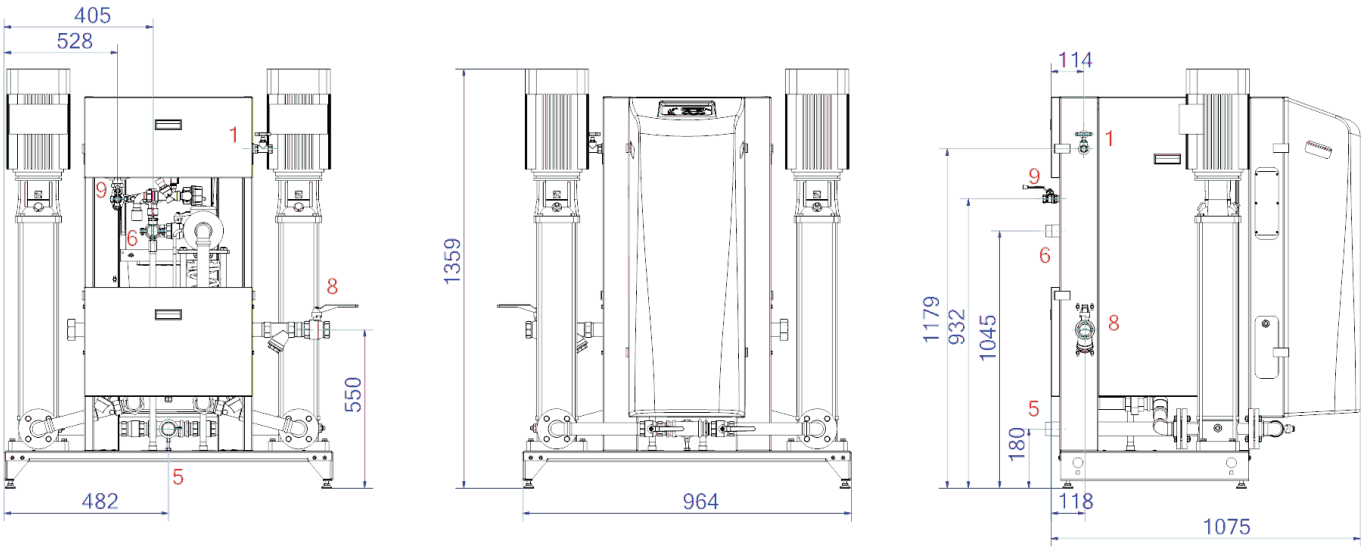

1. Refill connection	Rp1/2, Rp3/4
5. Suction line from expansion vessel	R6/4
6. Overflow line to the expansion tank	R6/4
8. Expansion pressure pipe	Rp6/4

Product data sheet Spirotech

ETIM product data

Height	1370 mm
Max. operating pressure	10.1 bar
Connection	Other
Power consumption	4.6 kW
Couplable	Yes
Electrical connection	Connection cable with plug
Function master/slave	No
With pressure expansion vessel	No
Digital control unit	Yes

Double pump/compressor unit	Yes
With exchangeable membrane	No
Compressor in base	No
Nominal diameter expansion connection	1 1/2 inch (40)
Max. medium temperature (continuous)	70 ºC
Horizontal positioning	No
Connection voltage	400 V
Article pressure rating	PN 16

Disclaimer
This product sheet has been compiled with the greatest possible care. Nevertheless, it may contain errors or omissions. For the most current and correct information we refer you to our website.