# Product data sheet Spirotech

## Product name

## EMCM Duo-6 max 6,6bar

## Article number

## EMCM-D6-6.6

## Product properties

The MultiControl Modular DUO is an automatic expansion and pressure-maintaining device. The unit contains 2 pumps (2x 50%) and 1 overflow valve. An unpressurised expansion tank is required.

- 2 pumps (2x 50%)
- 1 overflow valve (1x 100%)
- At least 1 unpressurized expansion vessel needs to be added
- Operational pressure range up to 4.0 to 16.0 bar
- The maximum temperature at the point of connection: 70°C (over 70°C possible with auxiliary tank)
- Maximum safety temperature in the system: 110°C
- Maximum operating pressure (PN) up to: 25 bar

## Product image

## Product dimensions

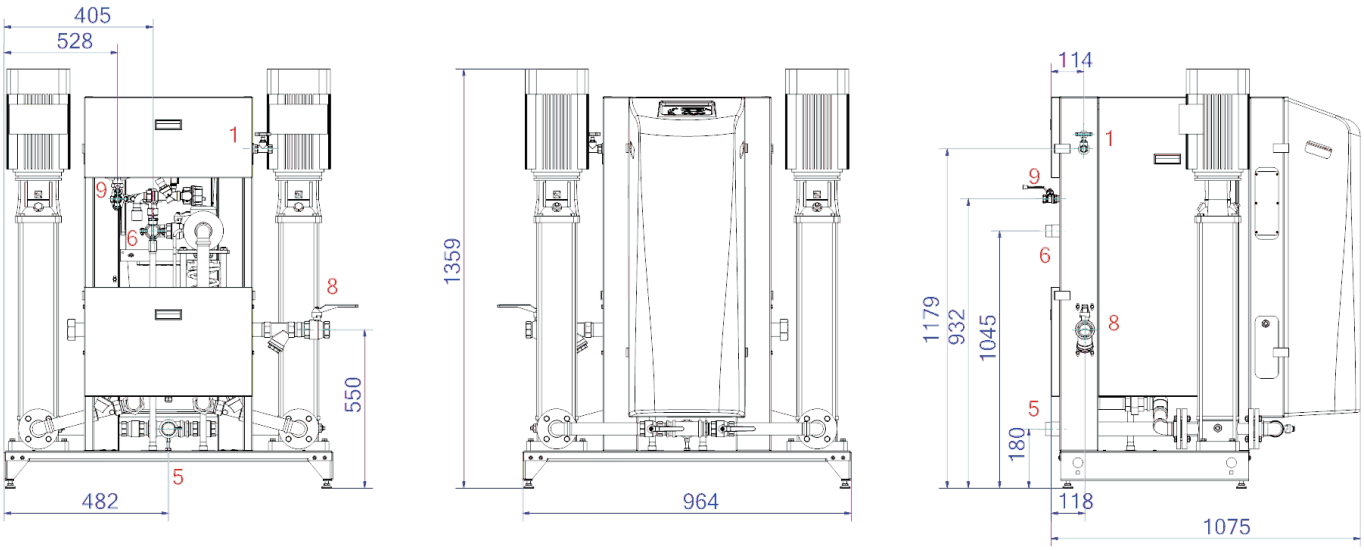


| | |
|---|---|
| **1. Refill connection** | Rp1/2, Rp3/4 |
| **5. Suction line from expansion vessel** | R6/4 |
| **6. Overflow line to the expansion tank** | R6/4 |
| **8. Expansion pressure pipe** | Rp6/4 |

# Product data sheet Spirotech

## ETIM product data

| | |
|---|---|
| Height | 1370 mm |
| Max. operating pressure | 6.6 bar |
| Connection | Other |
| Power consumption | 4.6 kW |
| Couplable | Yes |
| Electrical connection | Connection cable with plug |
| Function master/slave | No |
| With pressure expansion vessel | No |
| Digital control unit | Yes |

| | |
|---|---|
| Double pump/compressor unit | Yes |
| With exchangeable membrane | No |
| Compressor in base | No |
| Nominal diameter expansion connection | 1 1/2 inch (40) |
| Max. medium temperature (continuous) | 70 ºC |
| Horizontal positioning | No |
| Connection voltage | 400 V |
| Article pressure rating | PN 16 |

**Disclaimer**
This product sheet has been compiled with the greatest possible care. Nevertheless, it may contain errors or omissions. For the most current and correct information we refer you to our website.