Product data sheet Spirotech

Product name

SpiroVent -DN80 -Flange -HiFlow

Article number

HA080F

Product properties

A steel (microbubble) deaerator for high flow rate (3 m/s) with a DN50 - DN300 PN16 flange connection

- Removes all circulating air and micro bubbles effectively
- Applicable for high flow rate systems (3 m/s)
- Removes trapped air when installed at the correct location
- Greatly reduces the need for manual venting
- Applicable with 50/50 Glycol / Water (Volume)
- Constant low-pressure drop
- No unnecessary shutdown
- PN16 flange connections
- Connection diameters from DN50 to DN300, larger diameters available on request
- Exceptional guarantee

Product image



Product dimensions

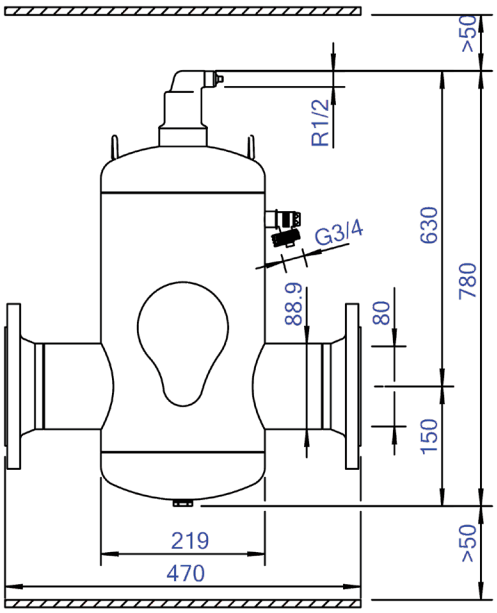

Product data sheet Spirotech

ETIM product data

Housing material	Steel
With drain tap	No
Housing material quality	St 37 (1.0254)
Backwash filter	No
Medium temperature (continuous)	0 - 110 °C
Max. operating pressure	10 bar
Kvs value	153.4 m^3/h
Variable flow direction	Yes
With insulation	No
Separator type	Air
Connection	Flange
Model	Horizontal
Nominal diameter	DN 80
Max. glycol mixture	50 %
Suitable for heating	Yes
Suitable for cooling	Yes

Construction length	470 mm
Article pressure rating	PN 10
Suitable for open system	No
Suitable for solar	No
Suitable for closed system	Yes
With dismountable filter	No
Filter volume	25 l
Magnet operating principle	No
With automatic de-aerator	Yes
With couplers	No
Inlet/outlet offset distance	0 mm
Material of connection	Steel
Flow-through capacity	0 - 54 m^3/h
Flange standard	DIN
Surface protection housing	Lacquered
Flange pressure rating (PN)	PN 16

Disclaimer
This product sheet has been compiled with the greatest possible care. Nevertheless, it may contain errors or omissions. For the most current and correct information we refer you to our website.