# Product data sheet Spirotech

## Product name

**SpiroVent -DN200 -Flange -HiFlow**

## Article number

**HA200F**

## Product properties

A steel (microbubble) deaerator for high flow rate (3 m/s) with a DN50 - DN300 PN16 flange connection

- Removes all circulating air and micro bubbles effectively
- Applicable for high flow rate systems (3 m/s)
- Removes trapped air when installed at the correct location
- Greatly reduces the need for manual venting
- Applicable with 50/50 Glycol / Water (Volume)
- Constant low-pressure drop
- No unnecessary shutdown
- PN16 flange connections
- Connection diameters from DN50 to DN300, larger diameters available on request
- Exceptional guarantee

## Product image



## Product dimensions

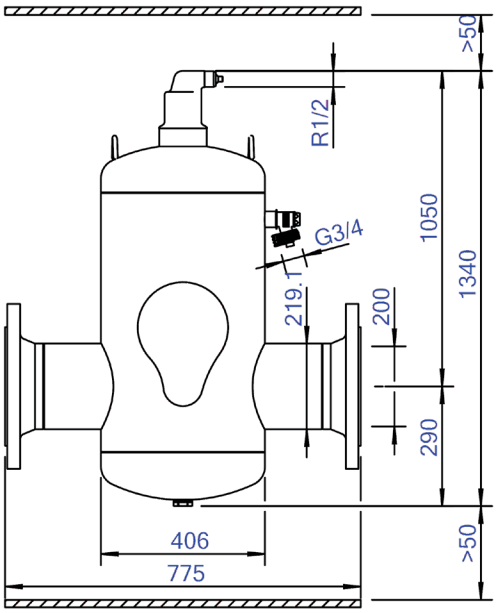

# Product data sheet Spirotech

## ETIM product data

| | |
|---|---|
| **Housing material** | Steel |
| **With drain tap** | No |
| **Housing material quality** | St 37 (1.0254) |
| **Backwash filter** | No |
| **Medium temperature (continuous)** | 0 - 110 °C |
| **Max. operating pressure** | 10 bar |
| **Kvs value** | 743.9 $m^3/h$ |
| **Variable flow direction** | Yes |
| **With insulation** | No |
| **Separator type** | Air |
| **Connection** | Flange |
| **Model** | Horizontal |
| **Nominal diameter** | DN 200 |
| **Max. glycol mixture** | 50 % |
| **Suitable for heating** | Yes |
| **Suitable for cooling** | Yes |

| | |
|---|---|
| **Construction length** | 775 mm |
| **Article pressure rating** | PN 10 |
| **Suitable for open system** | No |
| **Suitable for closed system** | Yes |
| **Suitable for solar** | No |
| **With dismountable filter** | No |
| **Filter volume** | 150 l |
| **Magnet operating principle** | No |
| **With automatic de-aerator** | Yes |
| **With couplers** | No |
| **Inlet/outlet offset distance** | 0 mm |
| **Material of connection** | Steel |
| **Flow-through capacity** | 0 - 360 $m^3/h$ |
| **Flange standard** | DIN |
| **Surface protection housing** | Lacquered |
| **Flange pressure rating (PN)** | PN 16 |

**Disclaimer**
This product sheet has been compiled with the greatest possible care. Nevertheless, it may contain errors or omissions. For the most current and correct information we refer you to our website.