Product data sheet Spirotech

Product name

EVU10 Expansion vessel, 10 bar - 100L, standing

Article number

EVU10-100

Product properties

Safety expansion vessels with replaceable membrane, P max. 10 bar / T max. 70ºC.

- Tested according to Pressure Equipment Directive 2014/68/EU
- Maximum temperature at the connection point: 70 or 90 °C, depending on the type
- Max. operating pressure: 10 bar
- Allowed system medium: water or water/glycol mixture min. 25% / max. 50%
- Unique 5-year warranty period for vessels ≤140L
- 2-year warranty period for vessels >140L

Product image



Product dimensions

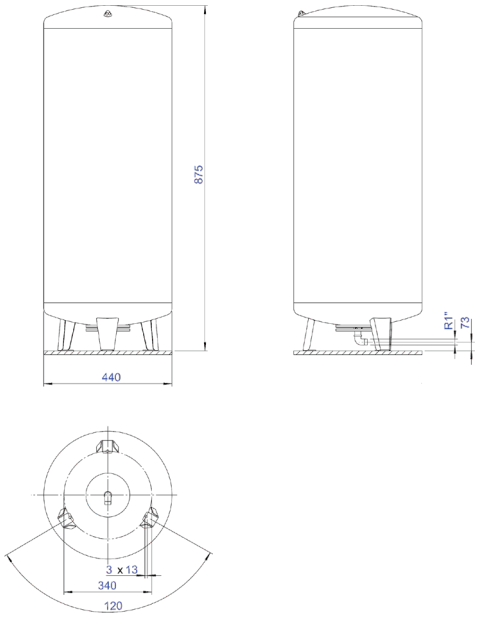

Product data sheet Spirotech

ETIM product data

Height	875 mm
Volume	100 l
Colour	Other
Diameter	604 mm
Medium temperature (continuous)	-10 - 70 °C
Max. operating pressure	10 bar
Connection	External thread conical BSPT-R (ISO 7-1 / EN 10226-1)
With exchangeable membrane	Yes
Nominal diameter expansion connection	DN 25
Outer pipe diameter, expansion connection	33.2 mm
Horizontal positioning	No
Suitable for central heating	Yes
Vertical positioning	Yes
With legs	Yes
Material membrane/bladder	Ethylene-propylene diene monomer rubber (EPDM)
With vessel manifold	No
With drain	Yes
Tilting height	918 mm
With mounting material	Yes
Max. glycol mixture	50 %
Suitable for tap water	No
Suitable for solar collector circuit	Yes
Pre-pressure	3.5 bar
With fixed wall support	Yes
Suitable for cooling	Yes

Disclaimer
This product sheet has been compiled with the greatest possible care. Nevertheless, it may contain errors or omissions. For the most current and correct information we refer you to our website.