Product data sheet Spirotech

Product name

EVU10 Expansion vessel, 10 bar - 1000L, standing

Article number

EVU10-1000

Product properties

Safety expansion vessels with replaceable membrane, P max. 10 bar / T max. 70ºC.

- Tested according to Pressure Equipment Directive 2014/68/EU
- Maximum temperature at the connection point: 70 or 90 °C, depending on the type
- Max. operating pressure: 10 bar
- Allowed system medium: water or water/glycol mixture min. 25% / max. 50%
- Unique 5-year warranty period for vessels ≤140L
- 2-year warranty period for vessels >140L

Product image



Product dimensions

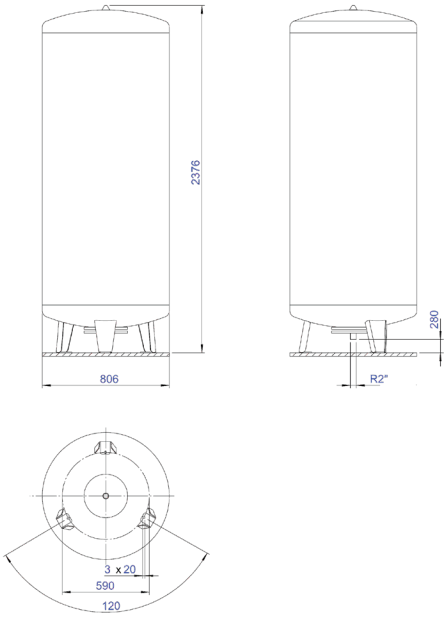

Product data sheet Spirotech

ETIM product data

Height	2376 mm
Volume	1000 l
Colour	Other
Diameter	806 mm
Medium temperature (continuous)	-10 - 90 °C
Max. operating pressure	10 bar
Connection	External thread conical BSPT-R (ISO 7-1 / EN 10226-1)
With pressure gauge	Yes
With exchangeable membrane	Yes
Nominal diameter expansion connection	2 inch (50)
Horizontal positioning	No
Suitable for central heating	Yes
Vertical positioning	Yes
With legs	Yes
Material membrane/bladder	IIR (butyl)
With vessel manifold	No
With drain	Yes
With mounting material	No
Max. glycol mixture	50 %
Suitable for tap water	No
Suitable for solar collector circuit	Yes
Pre-pressure	4 bar
With fixed wall support	No
Suitable for cooling	Yes

Disclaimer
This product sheet has been compiled with the greatest possible care. Nevertheless, it may contain errors or omissions. For the most current and correct information we refer you to our website.